AP3X Robot

Maintenance Manual

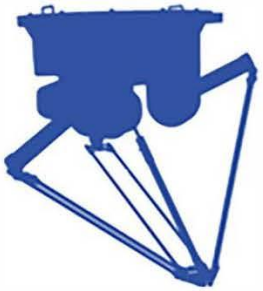

is the trademark of QKM Technology (Dongguan) Co., Ltd. QKM has been granted ownership of this trademark.

Maintenance Manual

AP3X Robot

AP3X-1130-1653

AP3X-1130-1654

AP3X-1600-1653

AP3X-1600-1654

Document Version: V2.0.1

Issue Date: 19/09/2022

QKM Technology (Dongguan) Co., Ltd.

Preface

Thank you for purchasing the robot produced by our company!

This manual describes the instructions for you to properly use the robot.

Read this manual carefully before using the robot.

Keep this manual properly for future reference.

Overview

This manual provides detailed information on the routine maintenance, common exceptions and their troubleshooting of AP3X series robots for the convenience of users to better maintain them.

Readers

This manual applies to:

Customer engineer

Technical support engineer

Maintenance engineer

Signs and their meanings

The signs in this document clearly indicate any dangers, warnings, attentions and notes that may occur while users perform the operations described in this manual; be sure to pay attention to the following signs when they appear in this document.

The signs in this manual are described in the table below:

Sign	Description
DANGER	It indicates that a dangerous situation would occur and cause deaths or serious injuries if it is not avoided.
WARNING	It indicates that a potentially dangerous situation would occur and cause personal injuries or robot damage if it is not avoided.
NOTICE	It indicates that an unpredictable situation would occur and cause robot damage, performance degradation, data loss, etc. if it is not avoided.
NOTE	It indicates the description and prompt of a key message.

Copyright©2022 QKM Technology (Dongguan) Co., Ltd.

All Rights Reserved.

QKM Technology (Dongguan) Co., Ltd.(hereinafter referred to as QKM) owns the patents, copyrights and other intellectual property rights of this product and its software. Without the written authorization of QKM, any unit or individual shall not extract or copy the contents of this document; and shall not directly or indirectly reproduce, manufacture, process and use this product and related parts.

Notice

The contents of this document are subject to change at any time due to product upgrade or other reasons. QKM reserves the right to change the contents of maintenance and operation in this manual without prior notice. For the recent information on this product, please download the latest manual from our official website.

Trademark

QKM is the trademark of QKM Technology (Dongguan) Co., Ltd. QKM has been granted ownership of this trademark.

Disclaimer

QKM does not assume any direct, indirect, special, incidental or consequential loss or liability due to improper use of this manual or this product.

The contents of this document are subject to change at any time due to product upgrade or other reasons. The company reserves the right to change the products or specifications in this manual without prior notice. To know the latest information on the products of our company, please download the latest manual from our official website.

QKM Technology (Dongguan) Co., Ltd. (Headquarters)

Tower A, Building 17, Headquarters 1, No. 4 Xinzhu Road, Songshan Lake High-tech Industrial Development Zone, Dongguan, Guangdong

Tel: +86 0769-27231381

Fax: +86 0769-27231381-8053

Postcode: 523808

Email: service@qkmtech.com

Website: www.qkmtech.com

Version History

The version history contains the information on each update of the document, and the latest version of the document includes the updates in all previous versions of the document.

Document Version	Issue Date	Revision Content
V1.0.0	12/29/2021	The first version of the document was released.
V2.0.0	09/08/2022	● Added Chapter 2 Routine Maintenance ● Added Chapter 2.1 Periodic Maintenance and Inspection Conditions and Descriptions ● Added Chapter 4 Replacement and Maintenance of Electrical Components 1. Revised chapter 4.1 Encoder Battery Replacement and Maintenance. 2. Added chapter 4.2 Controller

		Component Replacement and Maintenance, as well as the interface description and cable identification of the controller component. 3. Added chapter 4.3 IO free distribution PCBA replacement and maintenance. 4. Added chapter 4.4 Surge suppressor replacement and maintenance. 5. Added section 4.5 Filter Replacement and Maintenance. 6. Added chapter 4.6 Replacement and Maintenance of QBUS-3KW Module. 7. Added the replacement and maintenance of 24V switching power supply in chapter 4.7. 8. Added chapter 4.8 UPS power supply PCBA replacement and maintenance. 9. Added chapter 4.9 UPS lithium battery replacement and maintenance.

		10. 10. Added chapter 4.10 on the replacement and maintenance of the brake PCBA. 11. Deleted Section 2.3. 12. Modify step 4 of section 3.4
V2.0.1	2022.9.16	● Modify the content of safety shutdown in chapter 1.5.4 ● Modified the description of encoder battery maintenance in Section 4.1.

Contents

Preface I

Version History V

Contents VIII

List of Figures X

List of Tables VIII

Chapter 1 Safety Maintenance 1

1.1 Related personnel 1

1.2 Safe area 2

1.3 Emergency stop device 3

1.4 Safety signs 4

1.5 Precautions for general safety 5

1.5.1 Operation after change 5

1.5.2 Fault occurrence 6

1.5.3 Putting into operation and putting back into operation 6

1.5.4 Stop running 7

Chapter 2 Routine maintenance 9

2.1 Routine cleaning and maintenance 9

2.1.1 Regular maintenance and inspection 9

2.1.2 Cleaning..... 10

2.1.3 Routine checking..... 13

2.2 Testing of safety system..... 16

2.3 Contact customer service 16

Chapter 3 Maintenance of Mechanical Components 18

3.1 Checking of mounting bolt 18

3.2 Replacement of slave arm 20

3.3 Replacement of master arm 25

3.4 Replacement of moving platform and rotating shaft..... 28

3.5 Replacement of bushing..... 35

3.6 Replacement of spring..... 37

3.7 Reapplication of grease on spline shaft 39

Chapter 4 Maintenance of Electrical Components..... 42

4.1 Replacement of encoder battery 42

4.2 Replacement and Maintenance of Controller Components 47

4.3 Replacement and Maintenance of IO free distribution PCBA 52

4.4 Replacement and Maintenance of surge suppressor 55

4.5 Replacement and Maintenance of filter 58

4.6 Replacement and Maintenance of QBUS-3kW module..... 61

4.7 Replacement and Maintenance of 24V Switching Power Supply ... 64

4.8 Replacement and maintenance of UPS power supply PCBA..... 68

4.9 Replacement and maintenance of UPS lithium battery 71

4.10 Replacement and maintenance of brake plate 74

4.11 Detection of abnormalities in fan..... 76

Chapter 5 Environmental Protection 80

5.1 Considerations for environmental conditions 80

5.2 Use in clean room 81

5.3 Design considerations..... 81

List of Figures

Figure 3-1 Installation method 19

Figure 3-2 Spring buckling position 20

Figure 3-3 Connection of master arm to slave arm..... 21

Figure 3-4 Connection of moving platform to slave arm 21

Figure 3-5 Adjustment of master arm position..... 22

Figure 3-6 Removal at the end of moving platform 23

Figure 3-7 Removal at the end of master arm 24

Figure 3-8 Schematic diagram of installed master arm..... 25

Figure 3-9 Schematic diagram of master arm mounting surface 27

Figure 3-10 Fixing of master arm to reducer..... 28

Figure 3-11 Schematic diagram of moving platform 29

Figure 4-1 Remove the top cover cover screws 44

Figure 4-2 Encoder battery location..... 44

Figure 4-3 Encoder battery structure 45

Figure 4-4 Installation of encoder battery 46

Figure 4-5 Schematic diagram of the controller..... 48

Figure 4-6 Removing the socket head cap screws 49

Figure 4-7 Remove the controller assembly 49

Figure 4-8 Remove the screws from the controller connector..... 50

Figure 4-9 IO free distribution PCBA..... 52

Figure 4-10 IO free distribution PCBA disassembly diagram..... 53

Figure 4-11 IO free distribution PCBA disassembly diagram..... 54

Figure 4-12 Surge suppressor schematic..... 56

Figure 4-13 Removing the Surge Suppressor's Set Screws 57

Figure 4-14 Schematic diagram of filter location 59

Figure 4-15 Remove the filter fixing screws 60

Figure 4-16 Schematic diagram of the location of the QBUS-3kW module 62

Figure 4-17 Remove the fixing screws on the QBUS-3kW module..... 63

Figure 4-18 Schematic diagram of the location of 24V switching power supply 65

Figure 4-19 Schematic diagram of removing the 4 fixing screws on the 24V switching power supply adapter board 66

Figure 4-20 Remove the fixing screws of the switching power supply 67

Figure 4-21 Schematic diagram of UPS power supply PCBA location..... 69

Figure 4-22 Remove the UPS power supply PCBA fixing screws 70

Figure 4-23 Remove the plate screws that fix the lithium battery 73

Figure 4-24 Schematic diagram of the position of the brake plate 74

Figure 4-25 Remove the screws securing the brake plate 75

Figure 4-26 Schematic diagram of the location of the top cover fan assembly 77

Figure 4-27 Top cover fan assembly removal screw 78

Figure 4-28 Remove the fan fixing screws..... 79

List of Tables

Table 2-1 Routine cleaning and maintenance schedule 10

Table 2-2 Routine checking and maintenance schedule..... 13

Table 3-1 Reference standard for locking screw torque..... 19

Table 3-2 List of tools and accessories..... 21

Table 3-3 List of tools and accessories..... 25

Table 3-4 List of tools and accessories..... 30

Table 3-5 List of tools and accessories..... 35

Table 3-6 List of tools and accessories..... 37

Table 3-7 Selection of lubricating grease 39

Table 3-8 List of tools and accessories..... 39

Table 4-1 List of tools and accessories..... 43

Chapter 1 Safety Maintenance

Industrial robots comply with the current technical level and existing safety technical regulations. Use of robots in violation of regulations may cause personal injury and damage to robot system and other equipment.

Users with safety protection awareness are allowed to use industrial robots only in their good technical condition according to regulations. QKM will not be liable for any losses due to violations by users. To ensure the service life of the robot, please regularly maintain it in accordance with the contents of this manual.

1.1 Related personnel

Be sure to explain the way and scale of the work as well as possible dangers to the related personnel before the robot is put into use. Be sure to provide guidance and instructions on a regular basis to ensure the safety of personnel during the operation of the robot.

Users must meet the following conditions:

- Having been trained in respect to the robot industry.

- Having knowledge and experience in this respect, familiarity with stipulated standards, and ability therefrom to make correct judgments about the work to be done and identify potential hazards.

WARNING

Only professionals are allowed to perform operations on the electrical and mechanical devices of the robot to avoid personal injury.

1.2 Safe area

During the operation of the robot, the safe area must be clearly marked and noticed any time to avoid accidents caused by neglecting it.

- Work area

The work area refers to the range of working area of the robot determined by its motion trajectories and guaranteed by protective devices.

- Protective area

The protective area must be larger than the work area, inside which protective devices need to be placed for warning and safe use.

Common isolated protective devices: safety fence; common safety reminders: warning sign and slogan.

- Dangerous area

The dangerous area includes any position where the robot body and the robot arms may stay in their motion trajectories, which can be protected by isolated protective devices to avoid personal injury or property damage.

When the robot stops running, the robot arms will stop in the dangerous area.

1.3 Emergency stop device

In case of an abnormality in the robot, press the emergency stop device to ensure the safety of personnel and avoid damage to the robot and persons.

The emergency stop device needs to be properly set in the industrial robot for convenient operation. Be sure to press the device in the event of a dangerous or emergency situation.

The following situation will occur when the device is pressed:

- The robot and its support equipment will stop in the current state, and the servo of the robot will be off.
- To re-start the robot, be sure to turn the emergency stop device to unlock it.
- The emergency stop device is connected via the user interface. The emergency stop device is not included in the supply scope of AP3X Robot.

DANGER

To avoid dangers, the emergency stop electric circuit of the robot must consist of related support equipment, such as tools at the end of the mechanical arm or other devices.

1.4 Safety signs

Do not change or remove the nameplates, instructions, signs and marks related to the robot and equipment.

The signs on the robot include:

- Nameplate indicating power
- Safety icon
- Cable marker

1.5 Precautions for general safety

- Damage may be caused by the robot to personnel or property in the case that its safety functions and protective devices are incomplete. Do not use the robot when safety functions are disabled or protective devices are removed.
- During actual production, if the robot does not run for more than 24 hours, slowly warm it up before restart. Simply teach the robot to run back and forth between two points at 30% - 60% of the rated speed for more than 30 minutes.
- When starting a changed program, test it by reducing the system speed and then gradually increasing the speed.

1.5.1 Operation after change

- After making a change to the robot, be sure to check whether it meets the necessary safety requirements and test all safety functions.
- When starting a changed program, test it by reducing the system speed and then gradually increasing the speed.

1.5.2 Fault occurrence

- Turn off the control system of the robot to prevent any unexpected restart without permission.
- Set up an obvious sign at the site where the fault occurs to indicate the fault.
- Record the fault.
- Resolve the fault and perform a function check.

1.5.3 Putting into operation and putting back into operation

Before putting the equipment and devices into operation for the first time, be sure to check them to ensure that the equipment and devices are complete with perfect functions for safe operation and fault identification.

The following checks must be completed before putting into operation for the first time or putting back into operation:

- Check whether all protective devices have been properly installed and functioned well.

- Check whether the electrical wires and cables are properly connected. If compressed air is used, check whether the corresponding air pipes are connected properly.
- When teaching the robot, check whether its work area is reasonable and remove other objects from the work area.

1.5.4 Stop running

Precautions when the robot stops running:

- When the equipment is powered off for a long time and then used again, the battery is prone to abnormal phenomenon, so the robot should be at the origin position as much as possible before the equipment is stopped for a long time.
- Reduce the speed of the robot to ensure that the servo of the robot is shut off when the robot can be stopped.
- Recover materials and supplies related to the equipment and ensure that the equipment restores to the safe state for restart.
- Set up protective devices to indicate the current state of the equipment and avoid accidents caused by others' incorrect operations.

- The recommended interval for the robot to restart is about 300s. Do not restart immediately after turning off the power to avoid damage to the robot.
- Before starting the robot again, it is necessary to check whether the emergency stop button is released, so as to avoid the situation that the robot cannot turn on the servo.

Chapter 2 Routine maintenance

2.1 Routine cleaning and maintenance

2.1.1 Regular maintenance and inspection

Routine maintenance is a preventive maintenance, which refers to the maintenance personnel periodically carry out inspection and maintenance work under the condition of normal performance of the robot to ensure that the robot is in good condition and meet the production requirements, so that the robot is in a good state, and timely detection and elimination of the robot. To avoid hidden troubles, keep it neat, clean, lubricated and safe.

The personnel responsible for maintaining the QKM robot shall formulate the maintenance cycle according to the contents of this manual and in combination with the actual local conditions and working conditions. And do a good job in the daily inspection and maintenance of the robot, and find faults and deal with them in time.

The daily maintenance and overhaul intervals in this manual are mainly based on the following robot operating conditions:

working condition	directions
Low load (A)	Work 8 hours a day, load 0-3kg
	Work 16 hours a day, load 0-3kg
High load (B)	Work 16 hours a day, load 1-3kg
	Work 24 hours a day, load 0-3kg

In order to maintain the robot in good working condition, prevent failure and ensure safety, the user needs to carry out daily maintenance and inspection according to the following items; The period provided by the routine inspection is based on the normal working conditions, please refer to the "AP3X Robot User Manual" for the normal working environment. Environmental parameters, the actual maintenance cycle time should be adjusted according to the environment and frequency of robot usage.

2.1.2 Cleaning

Dust or dirt would appear on the surface of the robot after long-time operation, so the robot needs to be cleaned and maintained regularly. The maintenance cycle under general operating conditions is shown in Table 2-1.

Table 2-1 Routine cleaning and maintenance schedule

Maintenance item	Maintenance cycle	Recommended maintenance method
Robot body	2 weeks	Wipe dust off the surface with a clean cloth.
Ball joint	2 weeks	Remove impurities from bushings and surface of ball joints with an air gun or clean cloth.
Moving platform	2 weeks	Wipe dust off the surface with a clean cloth.
Pipeline	2 weeks	Wipe dust off the surface with a clean cloth.
Rotating shaft	2 weeks	Rinse the surface or wipe it with a clean cloth. Be sure to remove water from the surface. Apply lubricating oil or grease.
Motor cover	2 weeks	Wipe dust off the surface with a clean cloth to prevent the cooling hole from being blocked by dust.

- Selection of cleaning agent

Caustic soda

AP3X Robot can be cleaned with neutral cleaning agents generally used for food machinery at room temperature. All parts and components of the robot can be cleaned and maintained on a regular basis. Long-term

and frequent cleaning with corrosive cleaning agents or exposure to the sun may cause changes in the color of the robot material, whereas there would not be a significant loss, so there is no need to worry about it.

NOTICE

Immersion cleaning does not apply to anodized components, and cleaning agents with high corrosion shall not be used for robot cleaning.

Water

AP3X Robot adopts full-sealing design and can be normally cleaned and flushed with running water. If a nozzle with a diameter of 6 mm is used, keep a distance of 2.5~3 m for flushing at a flow rate of no more than 12.5 L/min ± 5%, and the time for flushing each part shall not exceed 1 min. Residual cleaning agents can be effectively removed by flushing.

After cleaning, a small amount of water may remain on the top, ball joints and moving platform of the robot. If so, use a clean cloth to wipe off the excess water, or air dry or blow dry it.

2.1.3 Routine checking

To keep the robot in good working condition, perform maintenance and checks on the following items. Be sure to cut off the power supply before performing maintenance and checks.

WARNING

When performing electrical operations, take precaution measures against static electricity, e.g. wear an anti-static wrist strap to ensure that the internal parts and components of the robot are not damaged.

Table 2-2 Routine checking and maintenance schedule

Check item	Maintenance cycle	Check content	Recommended maintenance method
Lining of ball joint	3 months	Check whether there is excessive wear.	Replace it in case of severe wear.
Rotating shaft*	2 weeks	Check whether there is sufficient lubricating oil or grease on the spline shaft.	Fill lubricating oil or grease.
Moving	3 months	Check whether it is	Replace the moving

platform		severely deformed, whether it rotates smoothly, and whether there is leakage.	platform.
Slave arm	3 months	Check whether the carbon fiber rod is damaged by impact or wear, and whether the spring hook and the shaft bushing are worn.	If the slave arm is damaged, replace it; if the bushing of the rotating shaft is severely worn, replace the bushing.
Top cover locking bolt and gasket	3 months	Check whether all the screws are loose using a torque wrench and whether the gasket is cracked.	If the bolt is loose, re-tighten it; if the gasket is damaged, replace the gasket.
Spring	2 weeks	Check whether the spring is deformed or broken.	Replace the spring.

Master arm	6 months	Check whether it is damaged by impact or wear.	If severely damaged, replace the master arm.
Emergency stop switch, external indicator light and button	6 months	Check whether the emergency stop switch and the power indicator light work normally, and whether the motor brake is effective.	If it is ineffective or does not work properly, replace the related component in time.

* Determine whether the grease runs out.

NOTE

Grease usage: Check whether there is grease in the groove of the spline shaft; or wipe the surface of the shaft with dust-free paper and observe whether the dust-free paper is reflective on its surface. If no, the grease is used up.

2.2 Testing of safety system

Formulate a daily or monthly test schedule according to the user site conditions to ensure that the robot and its external equipment can be tested within the specified time.

Test cycle of safety system: generally six months.

This is to ensure the safety and reliability of the robot. Make sure that the robot is in a low-power state and test any of the following switches and buttons. If any one of the test items fails, the robot must be restored to the normal working state before it continues to run.

Test items:

- Emergency stop switch provided by user to operate the robot.
- Manual-automatic switch on the manual control pendant (if a manual control pendant is provided by user).
- Servo enable switch on the manual control pendant (if a manual control pendant is provided by user).

2.3 Contact customer service

NOTE Contact QKM for AP3X Robot parts and components that

need to be replaced.

Contact QKM customer service when any one of the following abnormal situations occurs.

- Calibration of robot zero

If the robot zero is lost, perform calibration to find the zero.

Normally, the zero is lost under the following situations:

1. The robot encoder battery is loose or the encoder battery voltage is low.
2. An abnormal power failure occurs when a configuration file is imported.

- Replacement of electrical components

If the top cover of the robot needs to be opened for replacing a part or component during the operation of the robot, please contact QKM customer service.

E.g., the fan needs to be replaced after being confirmed abnormal by testing.

Chapter 3 Maintenance of Mechanical Components

NOTICE

- Safe operation state: The robot is in the servo-off state immediately when the power is off; the robot is connected to the power supply and can only be manually operated.
- Before performing operations on the robot body, wear protective gloves and other protective equipment to ensure the safety of the operator.

3.1 Checking of mounting bolt

Check the robot in the first week after its installation to avoid problems such as screw loosening arising from improper installation of fixing screws.

Check whether the fixing screws of the robot are in a locked state every six months or so after the first checking.

Downward installation Upward installation

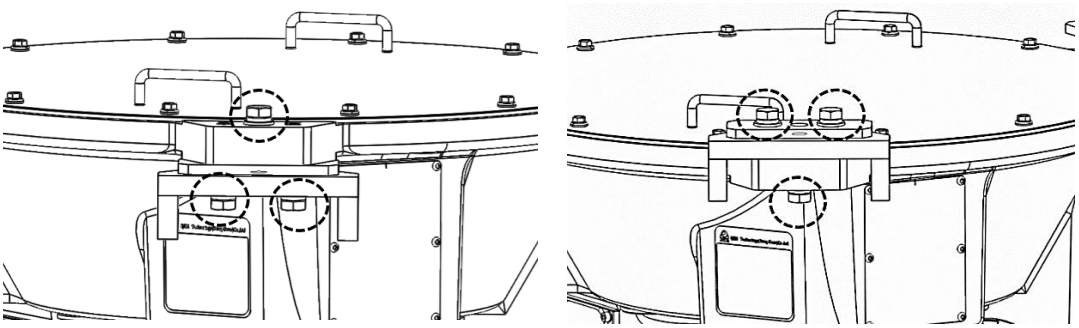

Figure 3-1 Installation method

- Preparation of tools and accessories: torque wrench

Check the tightening torque as required for installation. The reference standard for screw torque is shown in Table 3-1.

Table 3-1 Reference standard for locking screw torque

System	Name	Code	Tightening torque (for reference)
Metric system	Grade C hexagon head bolt (M16×65)	GB/T 5780-2000	190 Nm

3.2 Replacement of slave arm

The master arm is connected to the slave arm and the moving platform via ball joints, and tensioned by the spring between the ball hinges at both ends of the slave arm. The spring is buckled in the groove at both ends of the spring connector.

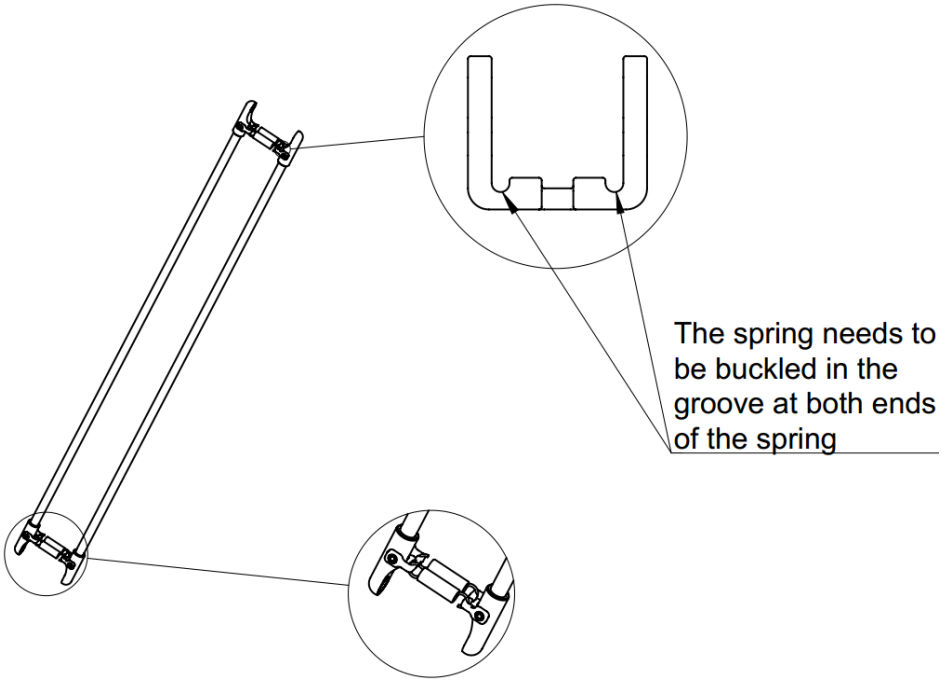

Figure 3-2 Spring buckling position

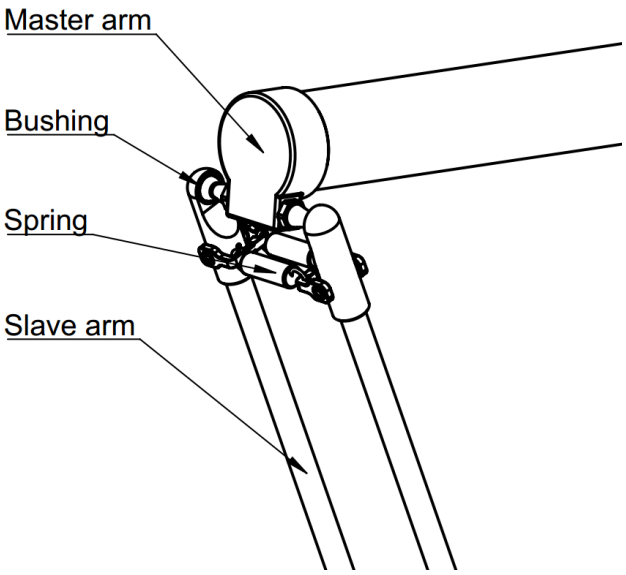

Figure 3-3 Connection of master arm to slave arm

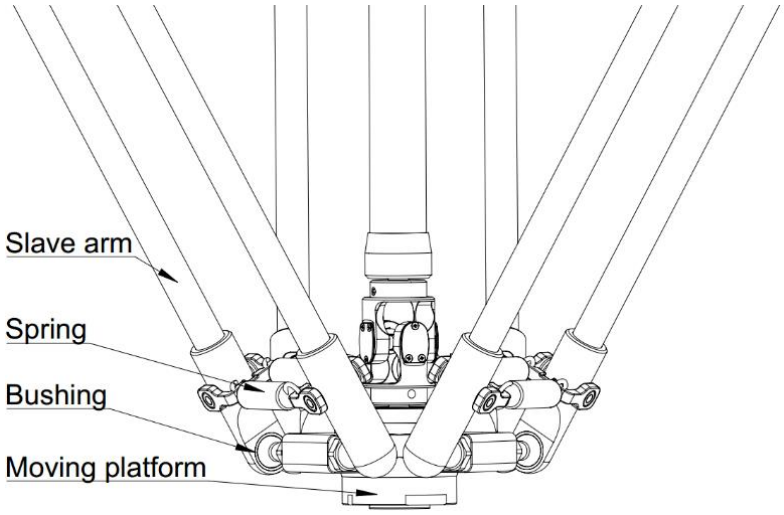

Figure 3-4 Connection of moving platform to slave arm

- Preparation of tools and accessories

Table 3-2 List of tools and accessories

No.	Name of tool / accessory	Qty	Remark
1	Slave arm assembly	3	/
2	Cardboard	Several	On which the

			slave arms are placed.

- Operation steps

Step 1 Make sure that the robot is in the servo-off state. Remove the cables, air pipes, etc. fixed on the slave arm. Remove the load from the end of the moving platform. Under the premise that the robot can be operated safely, hold the Brake button with one hand and drag the moving platform with the other hand to make it contact the ground or other objects such as conveyor belt surface to ensure that the end of the moving platform will not drop when the slave arm is removed. Then power off the robot.

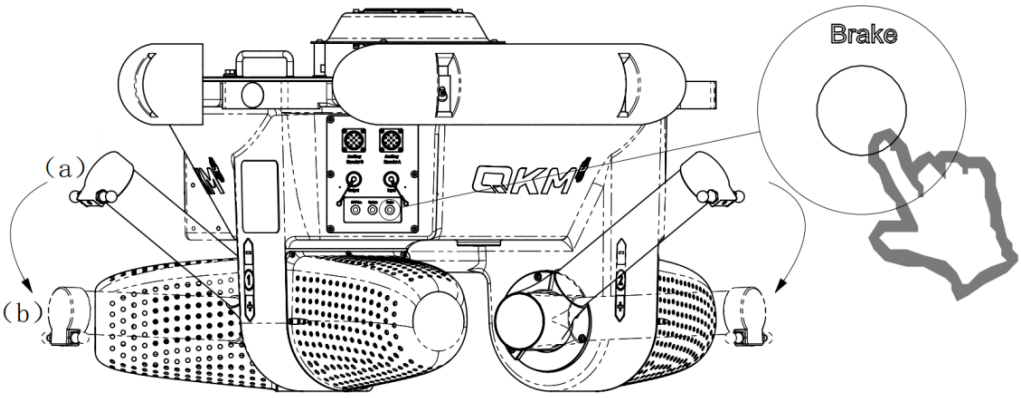

Figure 3-5 Adjustment of master arm position

Step 2 Pull the spring where it is connected to the moving platform to separate the bushing from the ball head, as shown in Figure 3-6.

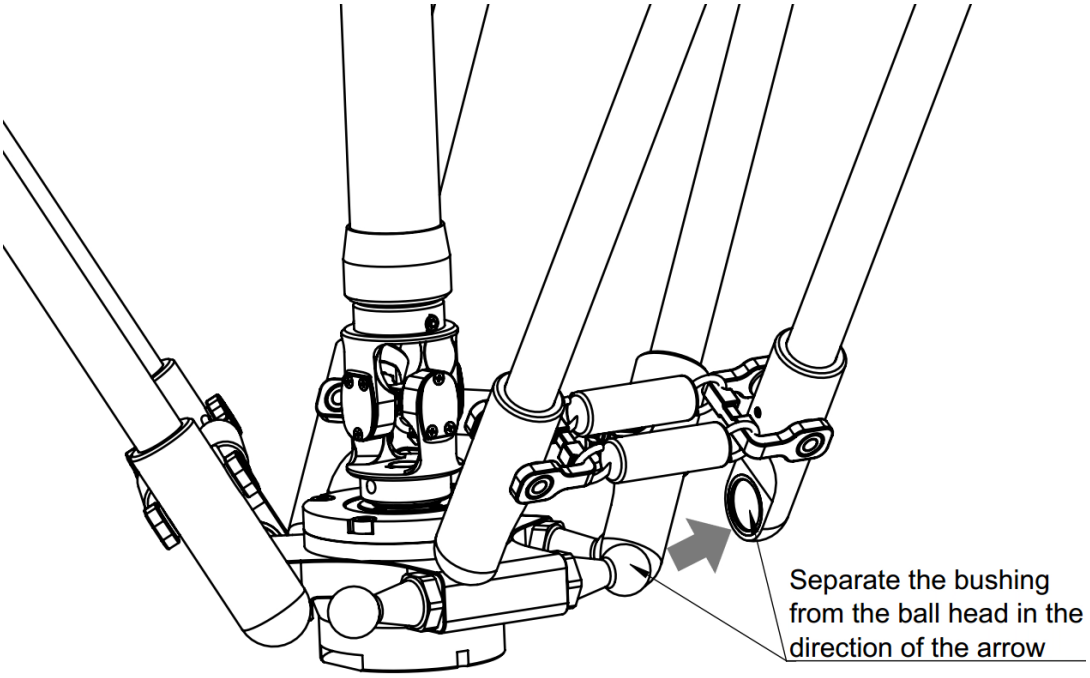

Figure 3-6 Removal at the end of moving platform

Step 3 Then pull the spring where it is connected to the master arm, as shown in Figure 3-7, and place the removed slave arm on the cardboard. At this time, keep eyes on the moving platform to prevent it from suddenly falling.

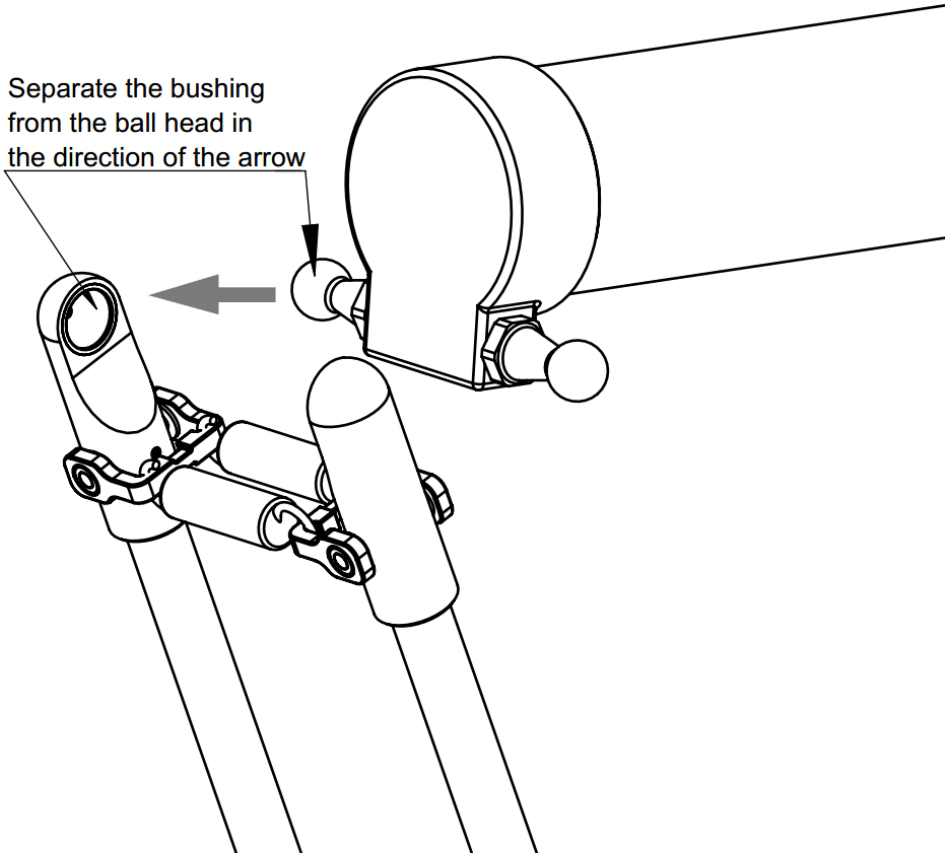

Figure 3-7 Removal at the end of master arm

Step 4 To install a new slave arm, pull the spring where it is connected to the end of the master arm with your hand and apply the bushing on the ball head to complete the connection of the slave arm to the end of the master arm when releasing your hand.

Step 5 Then, connect the slave arm to the end of the moving platform in the same way to complete the replacement of the slave arm.

3.3 Replacement of master arm

The replacement of the master arm needs to be carried out according to the following steps. After completion, a zero calibration is required to ensure that the robot can work normally. This calibration operation needs to be performed by our professionals.

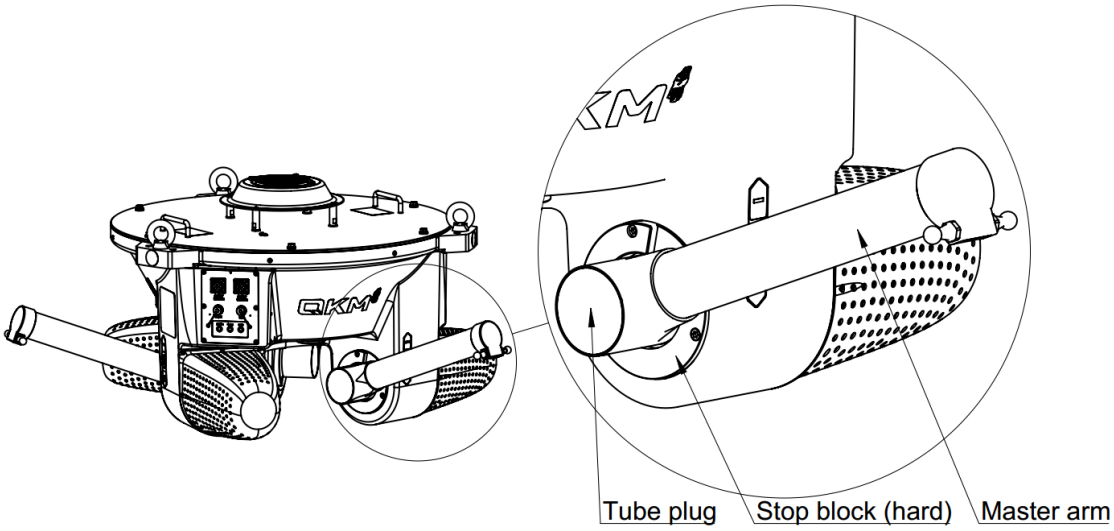

Figure 3-8 Schematic diagram of installed master arm

- Preparation of tools and accessories

Table 3-3 List of tools and accessories

No.	Name of tool / accessory	Qty	Remark
1	Master arm assembly	3	/
2	1.5 mm Allen wrench	1	Used to remove the tube plug.
3	1/2 square head ratchet	1	Used to remove the

	wrench		master arm.
4	H6 jack-hammer bit	1	Used to remove the master arm.
5	Dust-free paper	Several	Used to clean surface stains.
6	Loctite 243 medium strength threadlocker	Several	Used when restoring assembly.
7	torque wrench	1	Torque is about 28Nm

- Operation steps

Step 1 Make sure that the robot is in the servo-off state. Remove the cables, air pipes, etc. fixed on the master arm. If necessary, hold the Brake button and manually adjust the three master arms slowly to their appropriate position. Then power off the robot.

Step 2 Remove the slave arm. (Refer to Section 3.2 Replacement of slave arm)

Step 3 Use the 1.5 mm Allen wrench to open the tube plug. Remove the screws connected to the reducer using the 1/2 square head ratchet wrench and H6 jackhammer bit. Remove the screws fixing the master arm to the reducer to remove the master arm.

Step 4 Clean the stains on the reducer and mounting surface of the new master arm with dust-free paper, as shown in 错误!未找到引用源。9.

Figure 3-9 Schematic diagram of master arm mounting surface

Step 5 Tighten the screws on the master arm with a tightening torque of about 20 Nm, apply Loctite 243 medium strength threadlocker on the screws, and then cover the tube plug to complete the replacement of the master arm.

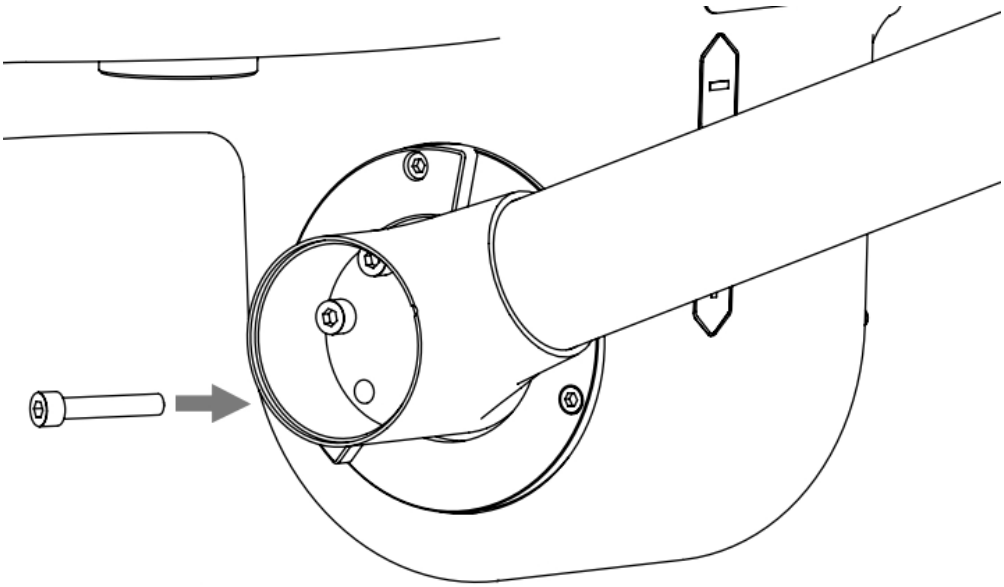

Figure 3-10 Fixing of master arm to reducer

3.4 Replacement of moving platform and rotating shaft

The replacement of the moving platform and the rotating shaft is applicable to AP3X 4-axis Robot, including AP3X-1130-1654 and AP3X-1600-1654.

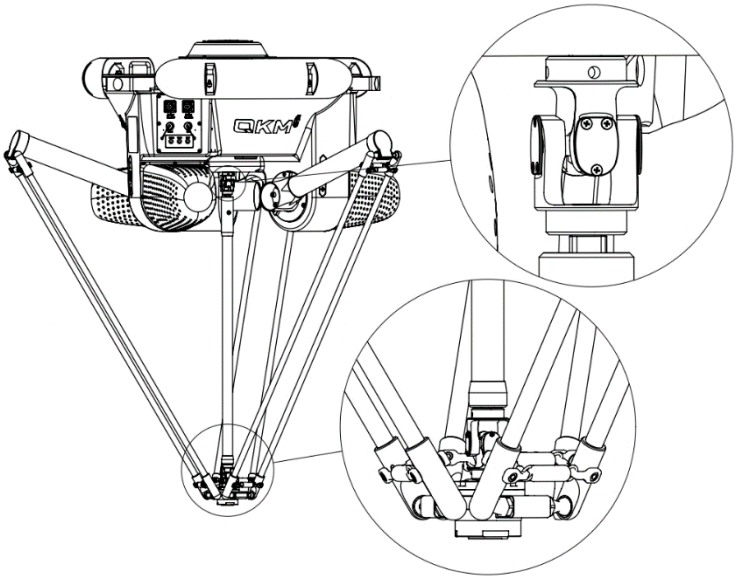

Figure 3-11 Schematic diagram of moving platform

The rotating shaft is composed of a ball spline and a carbon fiber tube with a universal joint at both ends of it. The universal joint at the end of the carbon fiber tube is connected to the moving platform and that at the end of the ball spline is connected to the motor reducer assembly of the rotating shaft. The upper and lower connecting shafts are equipped with flat keys to ensure reliable transmission.

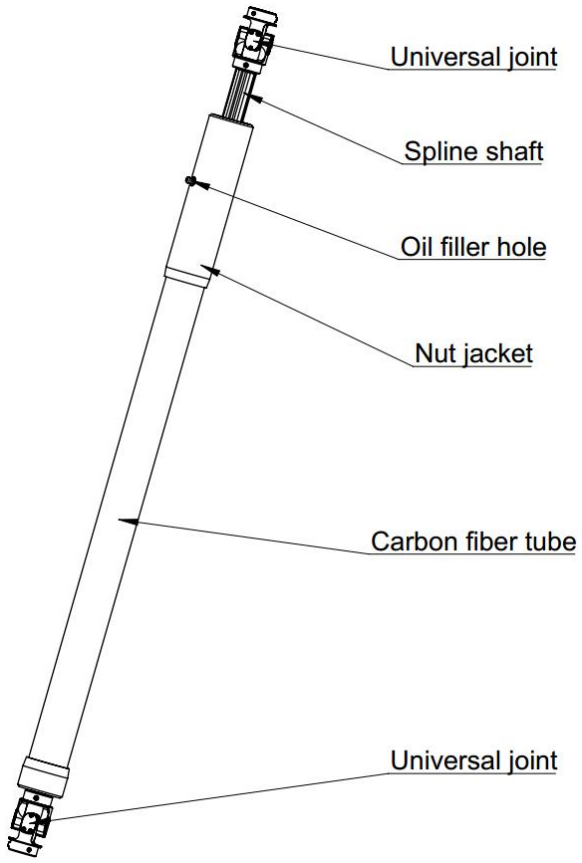

Figure 3-1 Schematic diagram of rotating shaft

- Preparation of tools and accessories

Table 3-4 List of tools and accessories

No.	Name of tool / accessory	Qty	Remark
1	Moving platform and rotating shaft	1	/
2	Universal joint disassembly tooling	1	Used to remove tight universal joint.
3	2.5 gauge Allen wrench	1	Used to remove rotating shaft.

4	Cardboard	Several	On which the moving platform is placed.

- Operation steps

Step 1 Make sure that the robot is in the servo-off state. Remove the cables, air pipes, etc. fixed on the master arm and the slave arm. If necessary, hold the Brake button and manually adjust the three master arms slowly to their appropriate position. Then power off the robot.

Step 2 Remove the work holders (clamping jaw, sucker, etc.) connected to the lower end of the moving platform.

Step 3 Loosen the ball hinges at the end of the slave arm connected to the moving platform (refer to Section 3.2 Replacement of slave arm for operation steps). At this time, the moving platform and the rotating shaft will slide under the action of their own gravity, so take measures to support them.

Step 4 As shown in Figure 3-13, use the 2.5 gauge Allen wrench to remove the hexagon socket set screws, then use a tool to separate the upper universal joint from the robot, and finally

pull out the rotating shaft assembly.

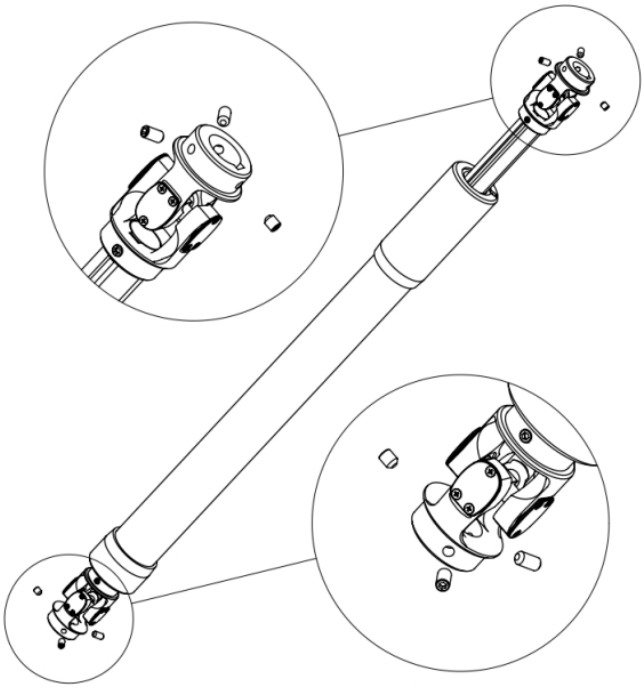

Figure 3-2 Removal of top screws

Step 5 To replace with a new moving platform, align the keyway of the universal joint with that at the connecting end of the moving platform to insert the universal joint, so that the top set screw holes at the shaft side of the universal joint are aligned with the counter bores at the shaft end. Tighten the top set screws and then the top screws in the keyway.

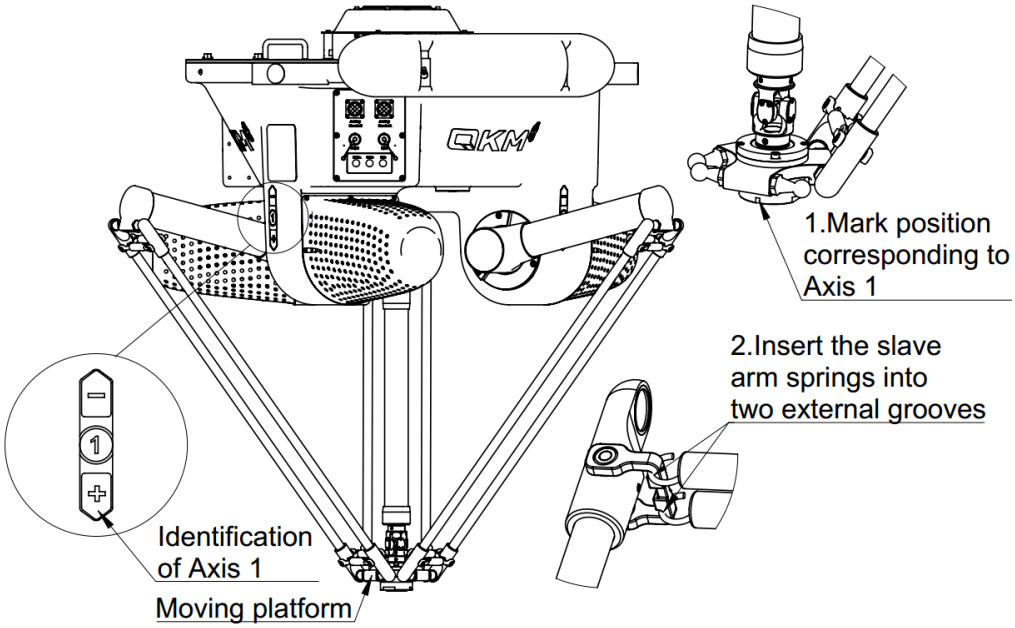

Figure 3-3 Replacement of moving platform

NOTE

- As the universal joint adopts the tight fit design, it may not be installed smoothly. Users can gently tap it to the top.
- The tightening torque of the set screws at the shaft side and universal joint keyway should be 2 Nm. If the tightening torque is too large, relevant components would be damaged. If it is too small, the locking force would be insufficient resulting in fall-off set screws during motion.
- Pay attention to the number and length of the set screws. Three set screws should be tightened at each end, of which two are 10mm and one is 6 mm

	in length.

Step 6 Align the keyway of the universal joint with that at the connecting end of the rotating shaft motor to insert the universal joint, so that the top set screw holes at the shaft side of the universal joint are aligned with the counter bores at the shaft end. Tighten the top set screws and then the top screws in the keyway to complete the installation of universal joint and motor reducer assembly of rotating shaft. Do not turn the rotating shaft motor while inserting the universal joint. Align the side with a notch at the end of the moving platform with the first axis of the master arm, as shown in Figure 3-14.

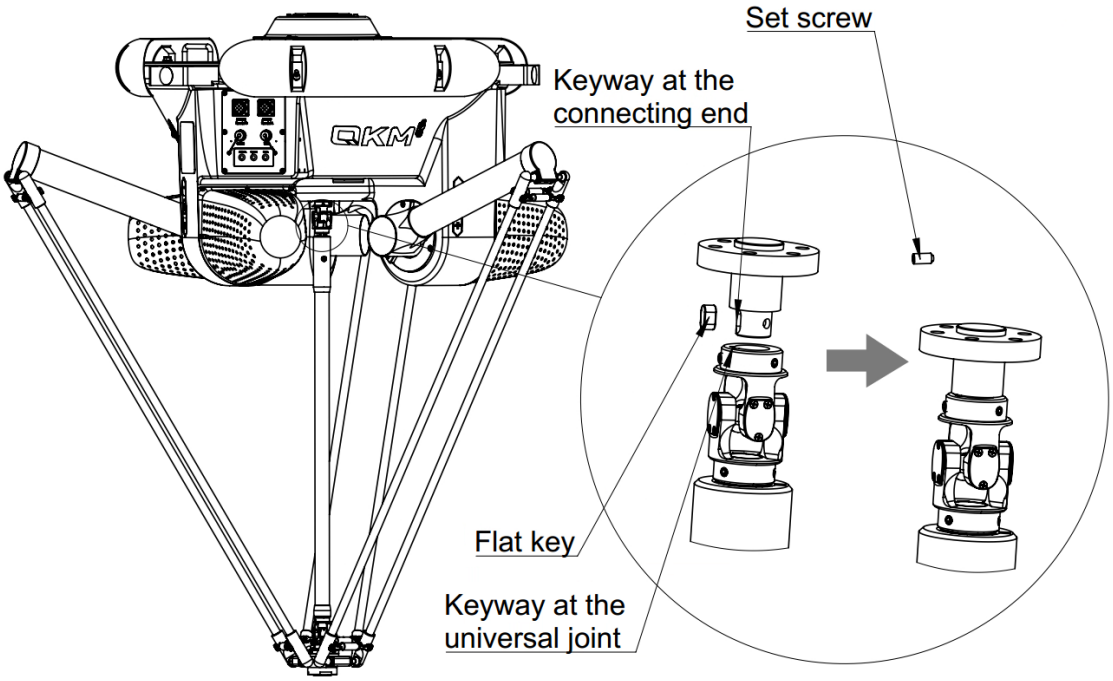

Figure 3-4 Inserting the universal joint

Step 7 Lift the moving platform and install the ball hinges of the slave arm. (in the same way of their removal)

Step 8 Install the work holders (clamping jaw, sucker, etc.) to complete the replacement of the moving platform.

3.5 Replacement of bushing

The bushing of the ball joints is critical to the accuracy of the robot, and its regular replacement can keep the robot in the best condition for a long time.

- Preparation of tools and accessories

Table 3-5 List of tools and accessories

No.	Name of tool / accessory	Qty	Remark
1	Bushing	Several	/
2	Bushing removal tool / knife	1	Used to remove the lining.

- Operation steps

Step 1 Make sure that the robot is in the power-off state.

Step 2 Remove the slave arm with reference to the section of Replacement of slave arm.

Step 3 Use the bushing removal tool to take the lining out of the ball joint. If the bushing is too tight, use a knife to pick it up along the gap where the lining fits and take it out after loosening it.

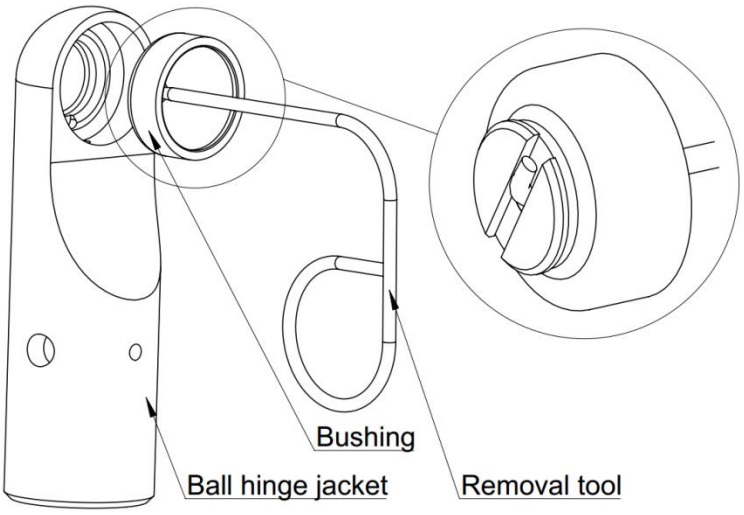

Figure 3-5 Proper removal of lining from ball joint

Step 4 Put a new bushing into the ball joint, press lightly and lay it flat. Ensure that the lining is properly installed without any protrusions from the ball joint.

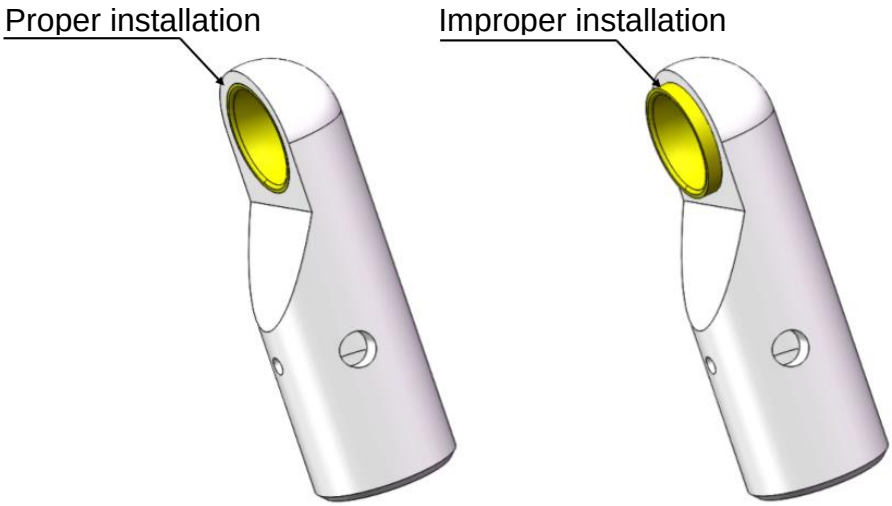

Figure 3-6 Proper installation of ball joint bushing

Step 5 Reinstall the slave arm and complete the replacement of the bushing.

3.6 Replacement of spring

- Preparation of tools and accessories

Table 3-6 List of tools and accessories

No.	Name of tool / accessory	Qty	Remark
1	Spring	Several	AWT-14-60 (all)

2	External straight circlip pliers	1	Used to remove the spring.

Replacement steps:

Step 1 Make sure that the robot is in the power-off state.

Step 2 Remove the slave arm with reference to the section of Replacement of slave arm.

Step 3 Take out the spring in the direction of the opening of the spring hook with the external straight circlip pliers and replace it with a new spring.

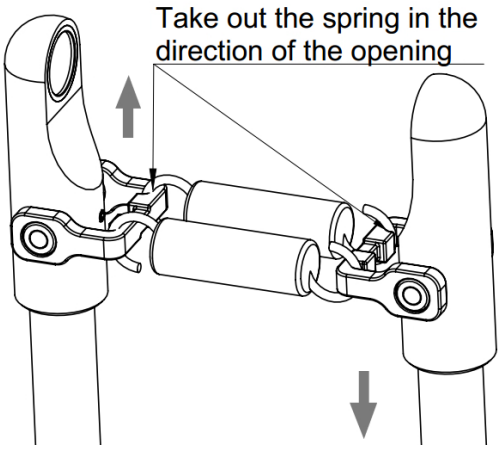

Figure 3-7 Taking out the spring

Step 4 When replacing with a new spring, install it in the direction of the spring opening, and confirm that the model, quantity, and position of the springs are the same as those before the replacement.

3.7 Reapplication of grease on spline shaft

There is a slight loss of grease on the part of the spline shaft exposed to the air. Under normal working conditions, fill lubricating grease on the spline shaft every 400 hours. Refer to Table 3-7 for the selection of lubricating grease.

Table 3-7 Selection of lubricating grease

Model	Suitable environment	Performance characteristics	Application part	Remark
AFC	Micro-vibration	Long life, resistance to micro-vibration	Spline screw shaft	Non-food industry
AZ food machinery grease	Micro-vibration	Stable, nonhazardous	Spline screw shaft	Food industry

- Preparation of tools and accessories

Table 3-8 List of tools and accessories

No.	Tool	Qty	Remark
1	Grease gun	1	/
2	AFC grease	6 g	/
3	Ordinary paper towel and	Several	Used to wipe grease.

	dust-free paper		

- Operation steps

Step 1 Make sure that the robot is in the servo-off state.

Step 2 Take the grease gun to fill AFC grease.

Step 3 Align the nozzle of the grease gun with the oil filler hole and fill grease into the spline shaft; the filling frequency should not exceed twice per second.

Step 4 When grease starts to emerge from the sliding shaft clearance, it indicates grease is full. Pull out the grease gun, and clean the grease leaking from the oil filler hole with paper towel or dust-free paper.

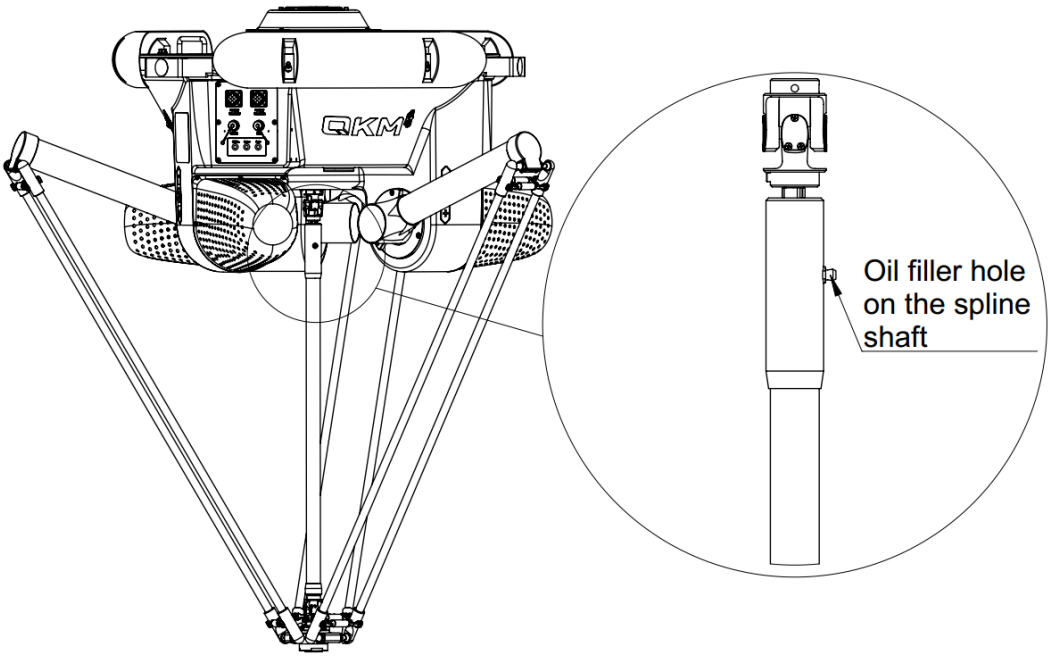

Figure 3-8 Lubrication of spline shaft

Chapter 4 Maintenance of Electrical Components

4.1 Replacement of encoder battery

The encoder equipped with the motor is an absolute value encoder, because it needs to record the absolute position, that is, the number of revolutions, so it needs to provide power to save the data. The encoder battery uses a 3.6V primary lithium sub-battery, and the voltage standard is not lower than 3.6V. When the battery is unplugged, the data of the encoder rotation will be lost, and the zero point of the robot will also be lost. At this time, the zero point needs to be re-calibrated.

The installation position of the robot encoder battery is on the back of the interface board 2. When replacing the encoder battery, you need to remove the screws on the interface board 2, and then remove the interface board 2, and finally you can see the encoder battery and replace it.

- In the case of continuous operation of the robot, replace the battery every 1.5 years; in the case of non-continuous operation, replace the battery once a year.

(Continuous operation: that is, the robot reaches 300 days per year, and runs 20H every day)

- Replacement after the power is exhausted will affect the production operation. It is recommended to carry out preventive replacement in advance
- Preparation of tools and accessories

Table 4-1 List of tools and accessories

No.	Name of tool / accessory	Qty	Remark
1	Encoder battery assembly	1	/
2	3 mm Allen wrench	1	Removal of interface board-2

- Replacement steps:

Step 1 Power off the robot before replacement, remove all cables from the robot, and ensure that the robot is powered off.

Step 2 Use a 12 mm open-end wrench to turn counterclockwise to remove the 12 M8×16 hexagon head flange bolts on the top cover, as shown in Figure 4-1.

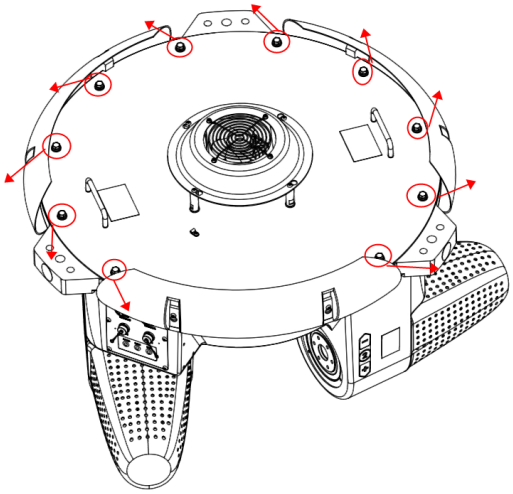

Figure 4-1 Remove the top cover cover screws

Step 3 After removing the top cover, the position of the internal encoder battery is shown in Figure 4-2.

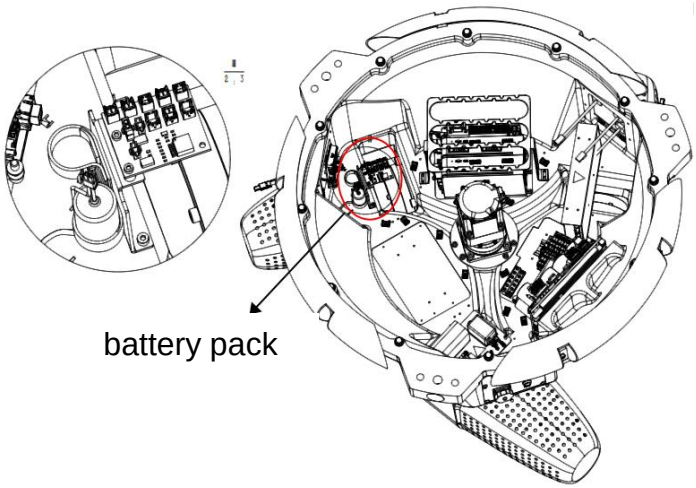

Figure 4-2 Encoder battery location

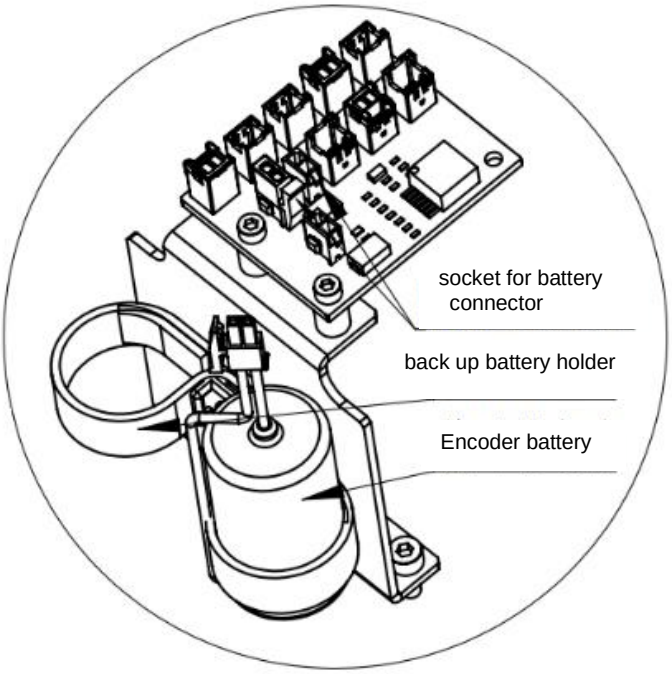

Figure 4-3 Encoder battery structure

Step 4 Replacement of battery

1. Use the 3 mm Allen wrench to loosen the fixing screws of the backup battery holder.
2. Place the backup battery into the backup battery holder, and put the socket into the battery connector holder, and then tighten the fixing screws.
3. Use the 3 mm Allen wrench to loosen the fixing screws of the old battery holder.
4. After confirming that the backup battery plug is connected to the connector, pull out the old battery plug, take out

the old battery, and then install the screws back to their original position.

5. The robot needs to be powered on for 30s after replacing the battery, and then powered off before it can be powered on for other operations, otherwise the new battery will be over-discharged.

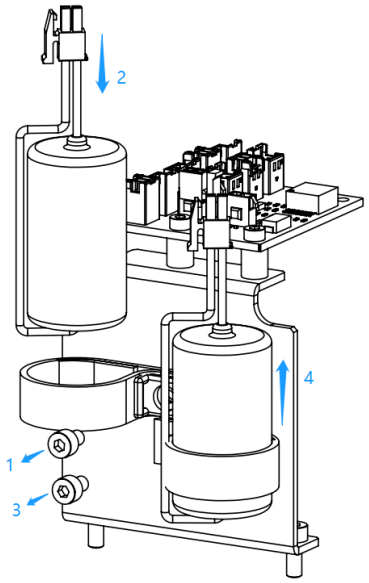

Figure 4-4 Installation of encoder battery

Step 5 Install the top cover and replace the battery.

NOTICE

The robot will lose the zero point when the encoder power supply is interrupted. To avoid this, when replacing the new encoder battery, the old encoder battery can only be removed after the new encoder

battery is fully connected.

4.2 Replacement and Maintenance of Controller Components

The controller is located in the robot control cabinet. To replace the controller, you need to remove the top cover. The position of the controller is shown in Figure 4-5.

CAUTION

Before replacing the controller, back up the data first. After replacing the controller, copy the configuration file of the original controller into the new controller to avoid parameter loss, and then re-mark the robot zero-point parameters. (If you cannot solve the problem by yourself, please contact QKM!.)

Tools and accessories: No. 3 Allen wrench, No. 2.5 Allen wrench, cable ties, diagonal pliers, controller, anti-static gloves

Screw type: socket head cap screws (M4*10), socket head cap screws (M3*10)

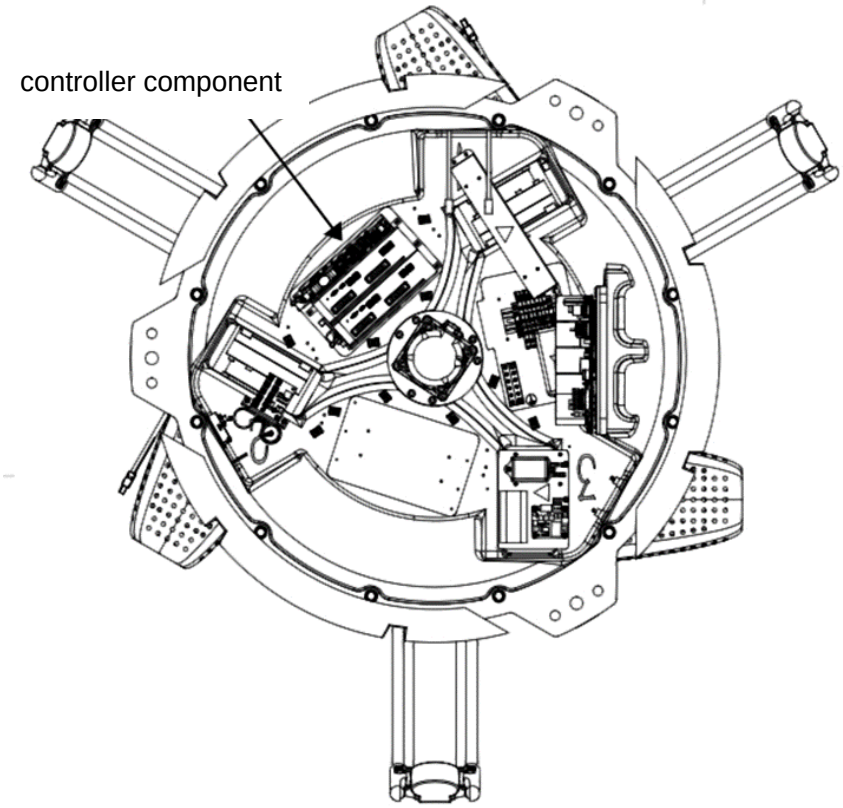

Figure 4-5 Schematic diagram of the controller

Step 1 Remove the top cover of the robot control cabinet.

Step 2 Unplug all cables connected to the old controller.

Step 3 Remove the screws on the fixing connector of the controller, and remove the controller from the control cabinet, as shown in Figure 4-6

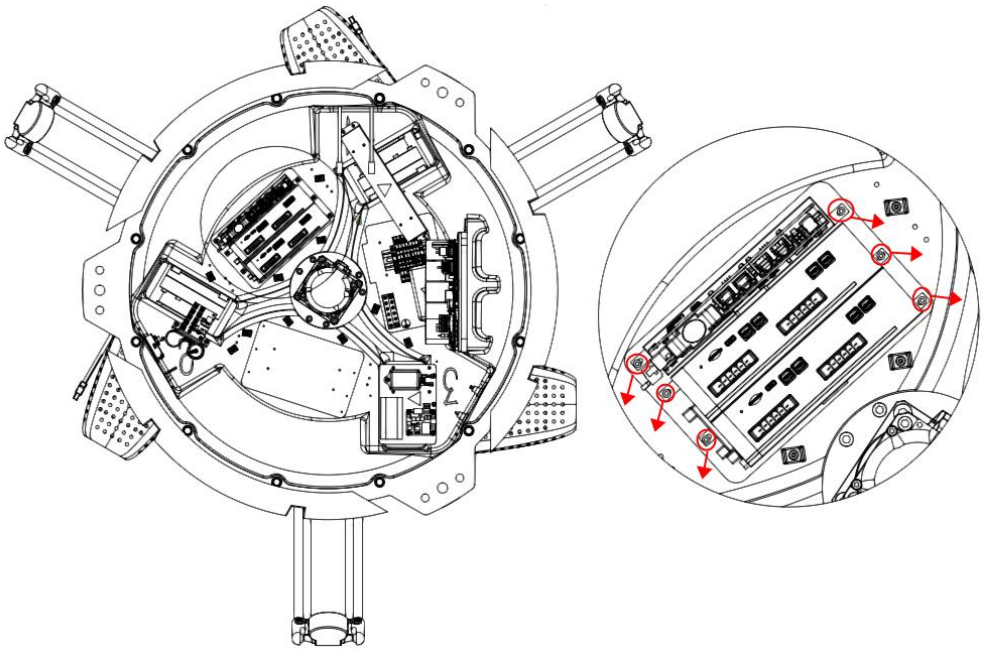

Figure 4-6 Removing the socket head cap screws

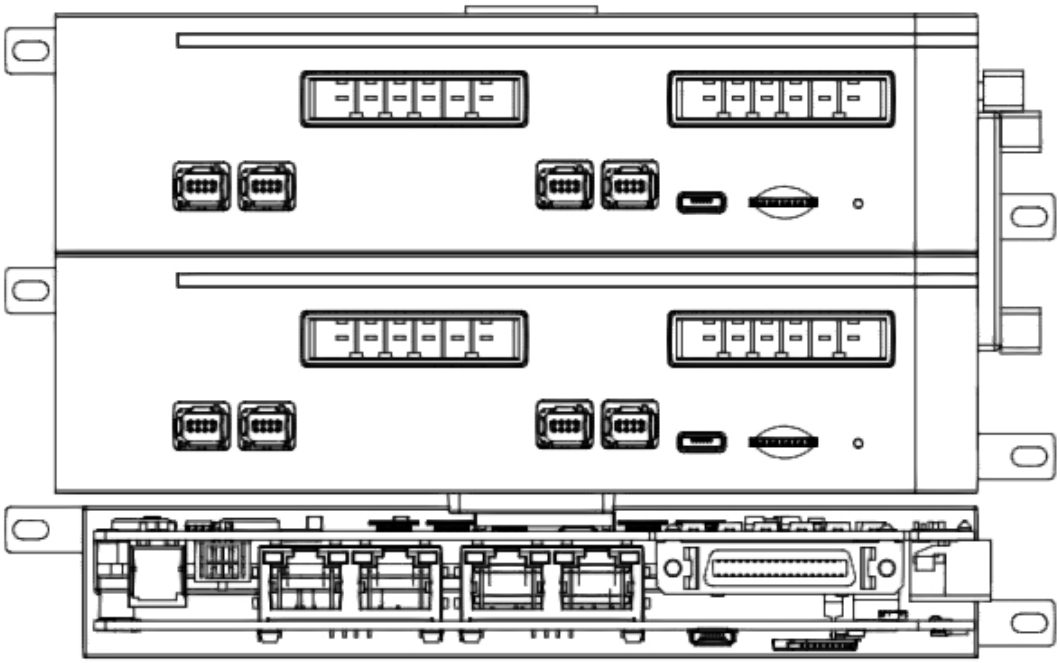

Figure 4-7 Remove the controller assembly

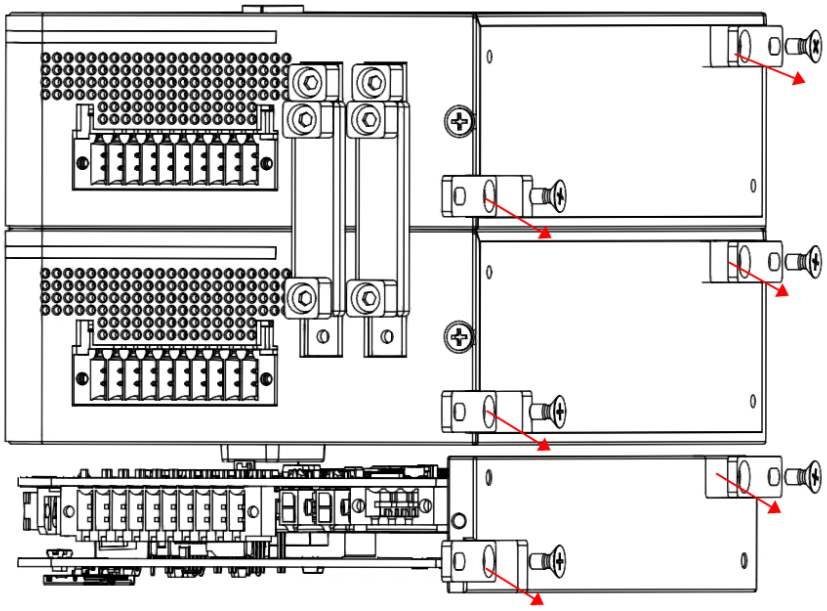

Figure 4-8 Remove the screws from the controller connector

Step 4 Use a No. 2.5 wrench to remove the screws securing the controller, as shown in Figure 4-8.

Step 5 Take off the old controller and remove the screws of the controller connector, install the removed connector on the new controller, and fasten it with Phillips flat head screws.

Step 6 Install the assembled new controller into the control cabinet in the reverse order of disassembly and tighten the screws.

Step 7 Reconnect all cables to the new controller.

NOTE At the time of installation, users shall check whether the interfaces match the line labels to avoid damage to the controller due to wrong connection. Line labels corresponding to each interface are shown in

---

the figure below:

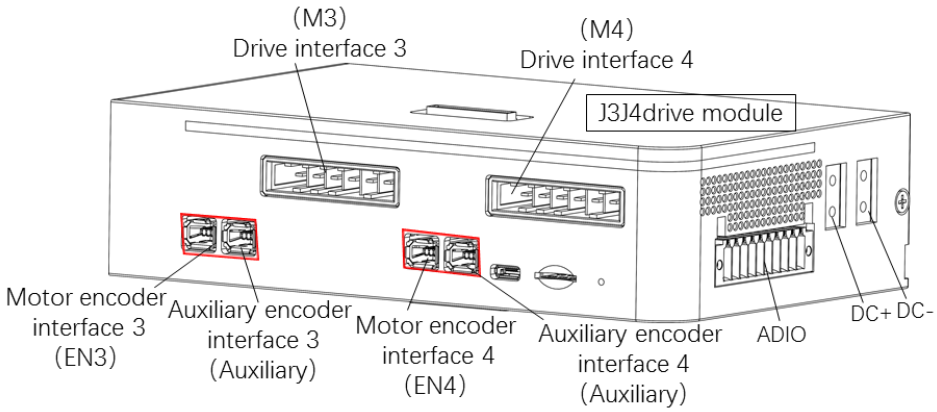

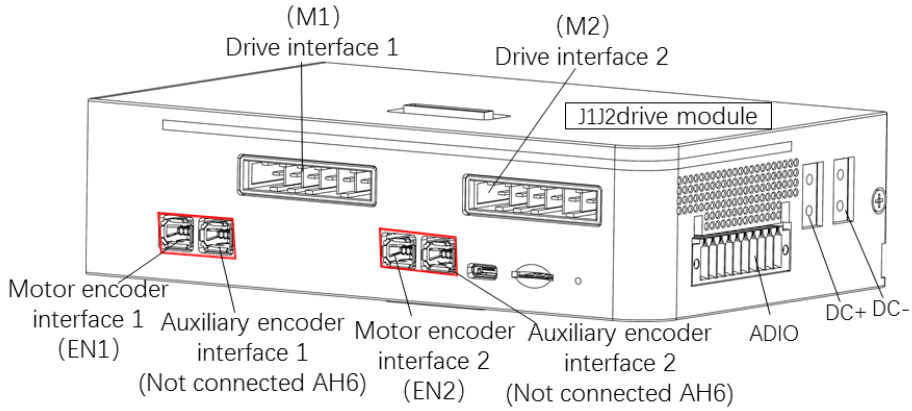

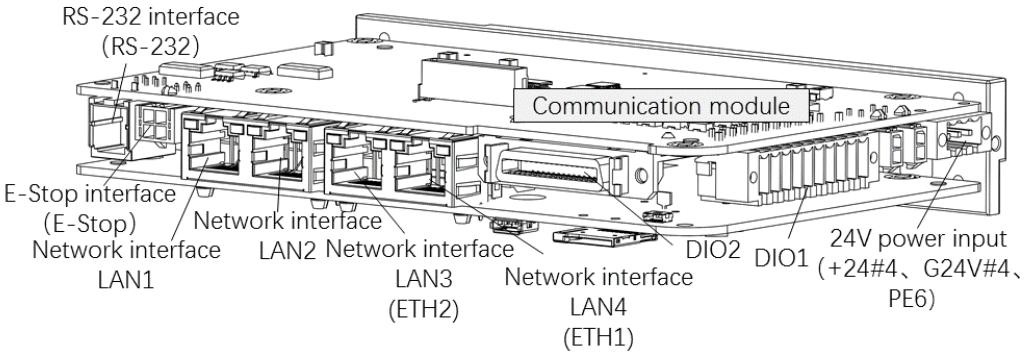

Step 8 Refer to Section 4.2 to restore the top cover of the control cabinet.

4.3 Replacement and Maintenance of IO free distribution PCBA

The IO free distribution PCBA is located on the interface board 2 in the control cabinet. If it needs to be replaced and maintained, the IO free distribution PCBA interface board 2 needs to be removed. The position of the IO free distribution PCBA is shown in Figure 4-9.

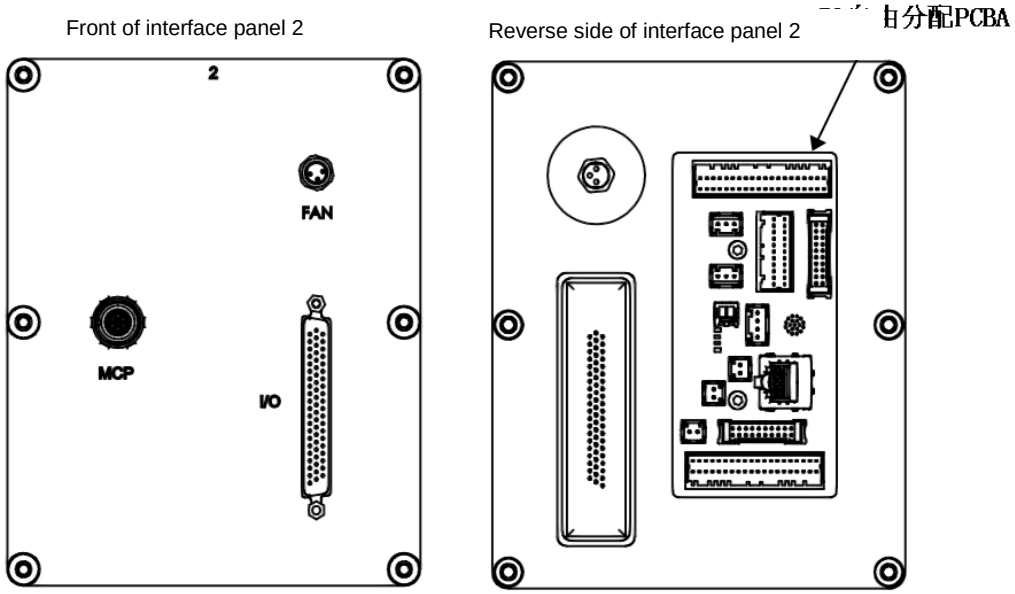

Figure 4-9 IO free distribution PCBA

Tools and accessories: No. 2.5 Allen wrench, special disassembly and assembly tools for aviation plugs, cable ties, diagonal pliers, anti-static gloves

Screw type: hexagon socket head cap screws (M5*12) and hexagon socket cap screws (M3*8)

Step 1 Remove the top cover by referring to the mechanical part.

Step 2 Unplug all cables connected to the IO free distribution PCBA.

Step 3 Remove the six M5*12 hexagon socket head cap screws on the robot interface panel 2, and gently pull out the base interface panel.

Step 4 Use a No. 2.5 wrench to loosen and remove the fixing screws on the IO free distribution PCBA, as shown in Figure 4-10.

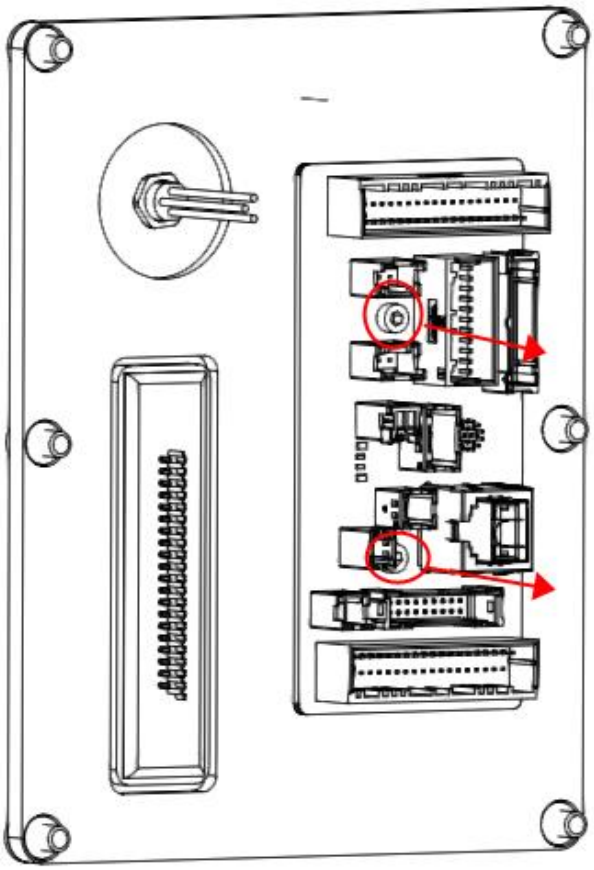

Figure 4-10 IO free distribution PCBA disassembly diagram

Step 5 Use a special tool to loosen the nuts and remove the IO free distribution PCBA. The screw positions are shown in Figure 4-11.

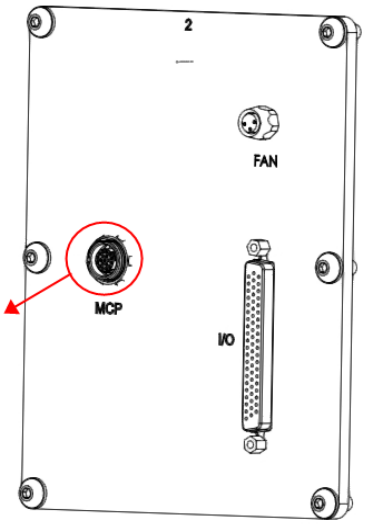

Figure 4-11 IO free distribution PCBA disassembly diagram

Step 6 Install the new IO free distribution PCBA on the base interface panel 2 and tighten the screws.

Step 7 Install the interface panel 2 on the robot control cabinet and fasten the screws.

Step 8 Connect all cables to the new IO free distribution PCBA.

NOTE At the time of installation, users shall check whether the interfaces match the line labels to avoid damage to the controller due to wrong connection. Line labels corresponding to each interface are shown in the figure below:

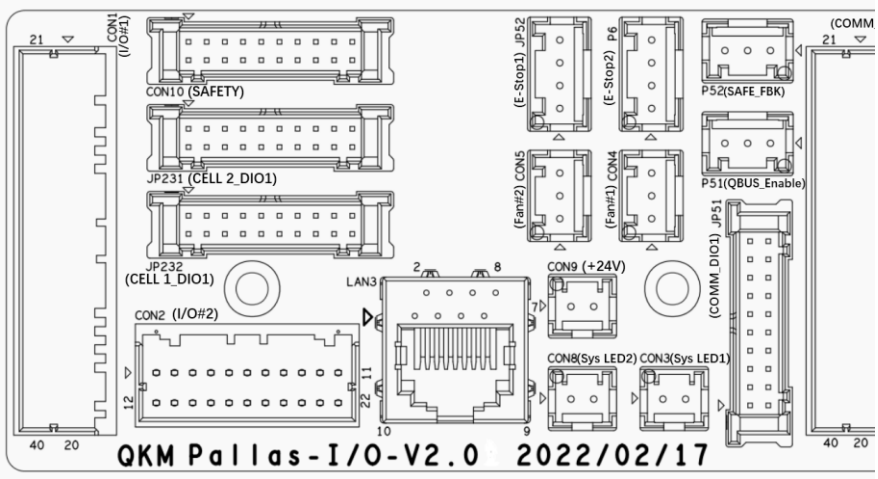

Step 9 Restore the top cover of the robot and tighten the screws.

4.4 Replacement and Maintenance of surge suppressor

The surge suppressor is inside the robot base. If it needs to be replaced, the top cover needs to be removed. The position of the surge suppressor is shown in Figure 4-12.

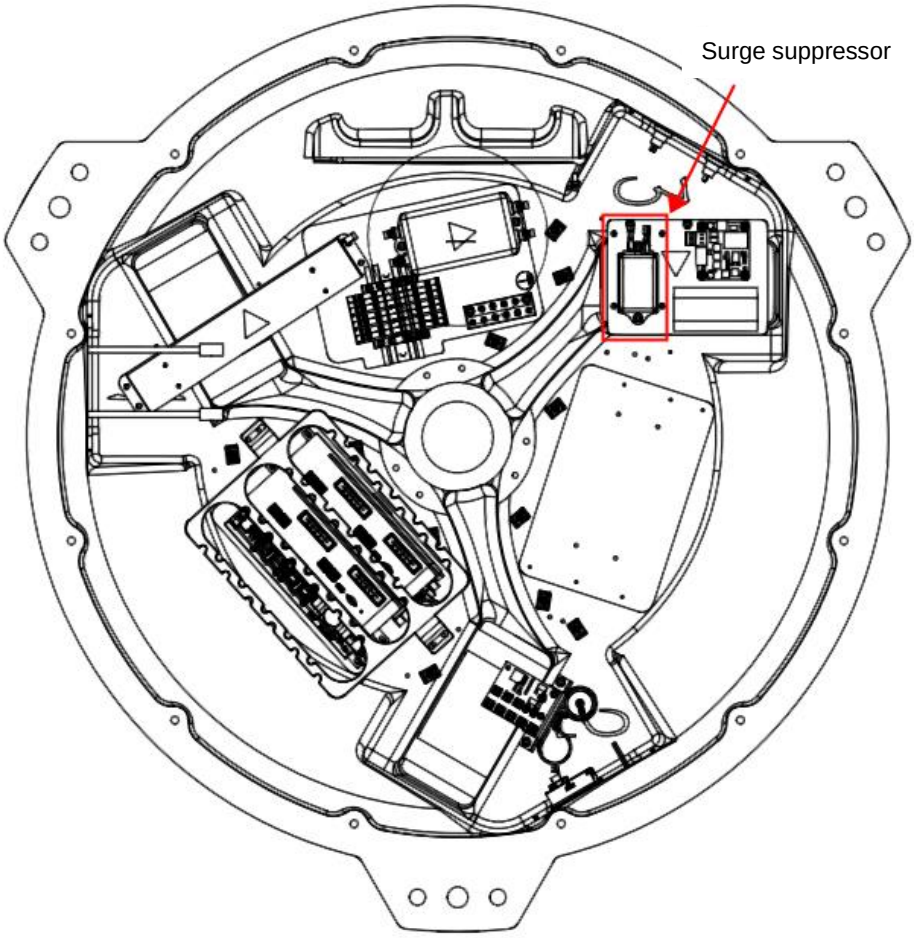

Figure 4-12 Surge suppressor schematic

Step 1 Remove the screws on the top cover of the robot base, and gently move the top cover to a safe position.

Step 2 Unplug all cables connected to the surge suppressor.

Step 3 Use an Allen wrench to loosen and remove the fixing screws of the surge suppressor, as shown in Figure 4-13.

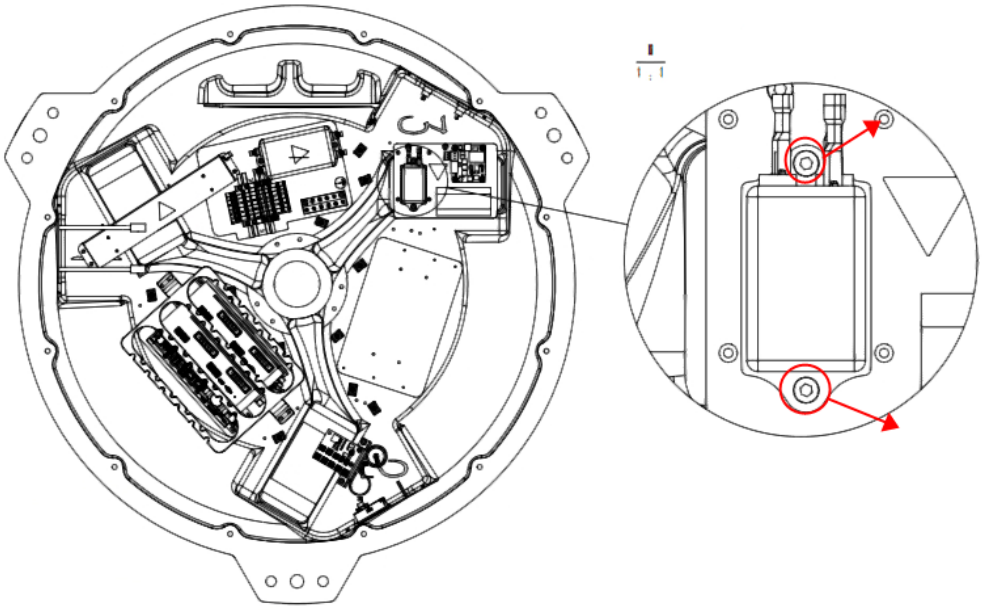

Figure 4-13 Removing the Surge Suppressor's Set Screws

Step 4 Install the new surge suppressor on the plate inside the base and tighten the screws.

Step 5 Plug all cables back into the new surge suppressor.

NOTE At the time of installation, users shall check whether the interfaces match the line labels to avoid damage to the controller due to wrong connection. Line labels corresponding to each interface are shown in the figure below:

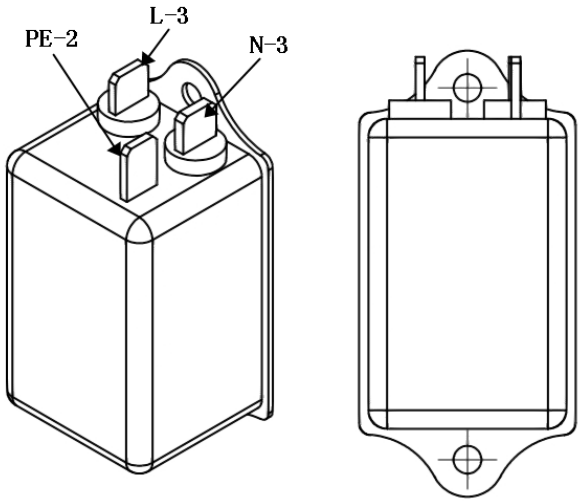

Step 6 Reinstall the top cover of the robot base and tighten the screws

4.5 Replacement and Maintenance of filter

The filter is located in the base of the robot. If it needs to be replaced, the top cover of the base needs to be removed. The position of the filter is as shown in the figure.

Tools and accessories: No. 3 Allen key, cable ties, diagonal pliers, filters, anti-static gloves

Screw type: hexagon socket head cap screws (M4*8)

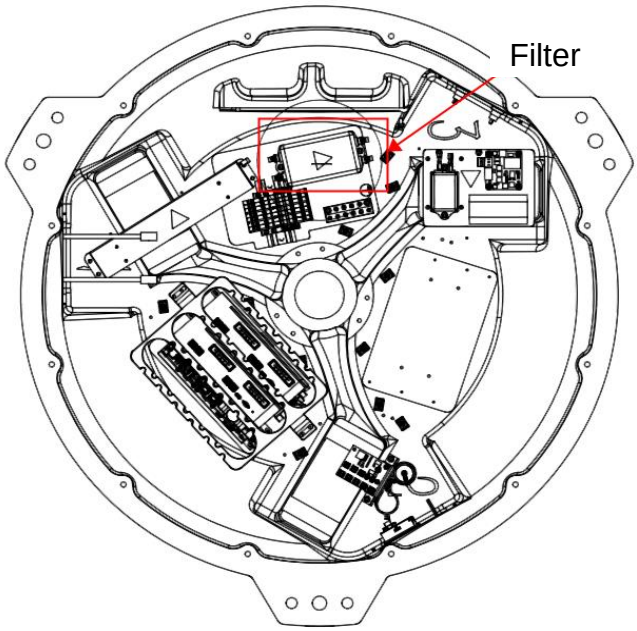

Figure 4-14 Schematic diagram of filter location

Step 1 Remove the screws on the top cover of the robot base, and gently move the top cover to a safe position.

Step 2 Unplug all cables connected to the filter.

Step 3 Use an Allen wrench to unscrew the fixing screw on the filter and remove it, as shown in the figure below.

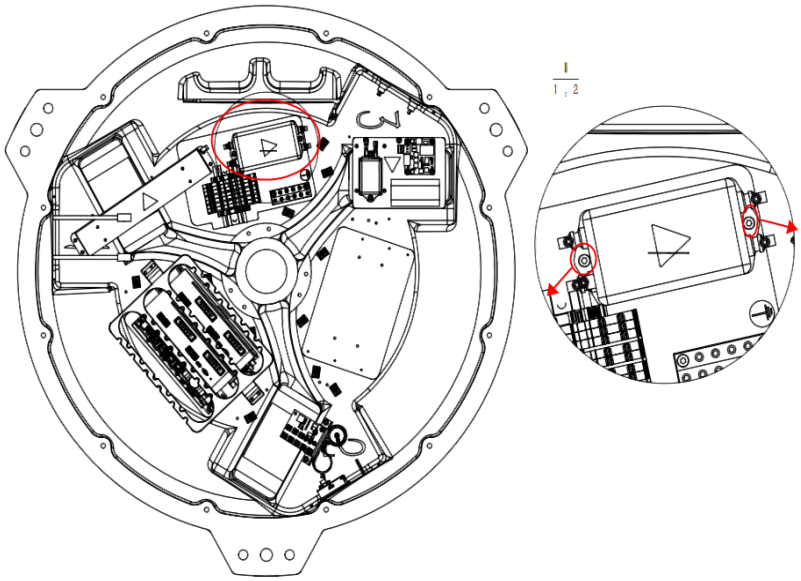

Figure 4-15 Remove the filter fixing screws

Step 4 Remove the old filter, install the new filter on the base and tighten the screws.

Step 5 Connect all cables to the new filter.

NOTE At the time of installation, users shall check whether the interfaces match the line labels to avoid damage to the controller due to wrong connection. Line labels corresponding to each interface are shown in the figure below:

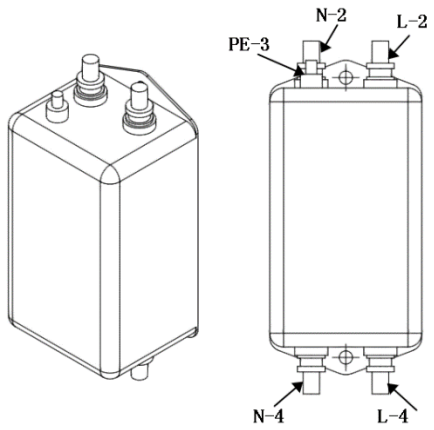

Step 6 Reinstall the top cover of the robot base and tighten the screws

4.6 Replacement and Maintenance of QBUS-3kW module

The QBUS module is located in the robot base. If it needs to be replaced, the top cover of the base needs to be removed. The position of the QBUS module is shown in the figure below.

Tools and accessories: No. 3 Allen key, cable ties, diagonal pliers, QBUS-3kW module, anti-static gloves

Screw type: hexagon socket head cap screws (M4*12)

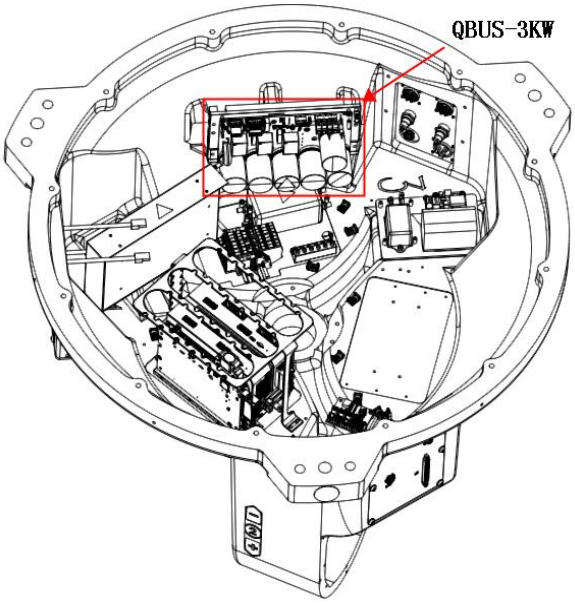

Figure 4-16 Schematic diagram of the location of the QBUS-3kW module

Step 1 Remove the screws on the top cover of the robot base, and gently move the top cover to a safe position.

Step 2 Unplug all cables connected to the filter.

Step 3 Use a No. 3 Allen key to loosen and remove the four fixing screws on the QBUS-3kW module, as shown in Figure 4-17.

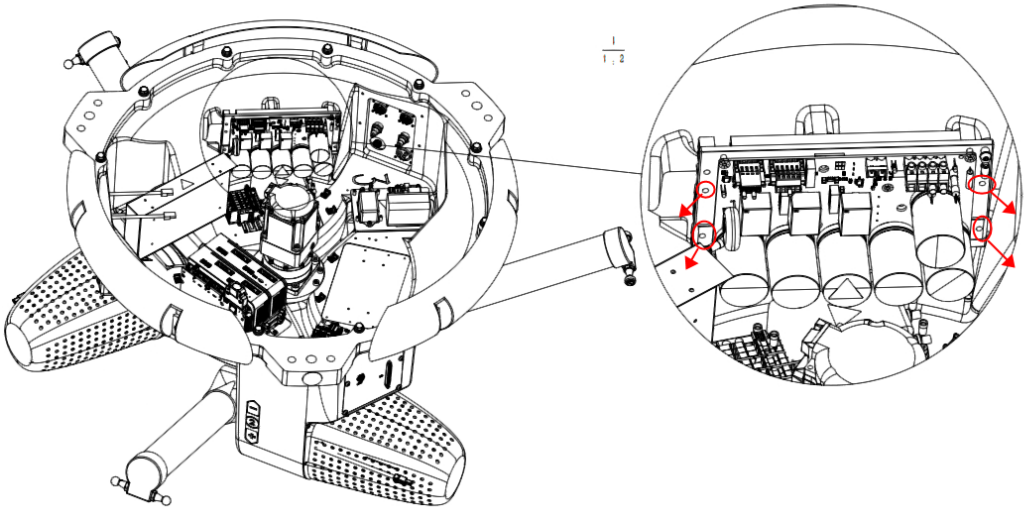

Figure 4-17 Remove the fixing screws on the QBUS-3kW module

Step 4 Remove the old QBUS-3kW, install the new QBUS module on the fixing holes in the base, and fasten the screws.

Step 5 Connect all cables to the new QBUS-3kW module.

NOTE

用户安装时注意接口与线标一一对应，如图所示，避免接错导致控制器损坏，各接口对应的线标如下：

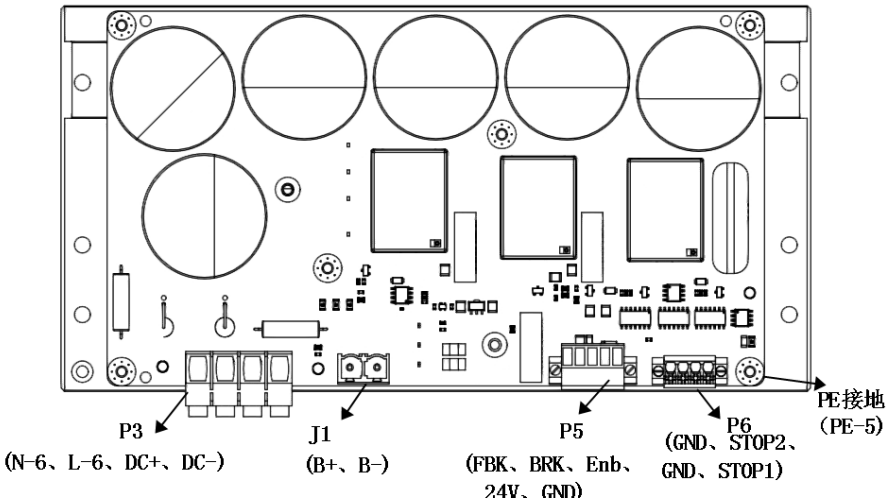

Step 6 Reinstall the top cover of the robot base and tighten the screws.

4.7 Replacement and Maintenance of 24V Switching Power Supply

The 24V switching power supply is located in the robot base. If you need to replace it, you need to remove the top cover of the base. The 24V switching power supply is shown in the figure below.

Preparation tools and accessories: Phillips screwdriver, diagonal pliers, 24V switching power supply, anti-static gloves

Screw type: hexagon socket head cap screws (M4*8), 304 stainless steel shrapnel washers

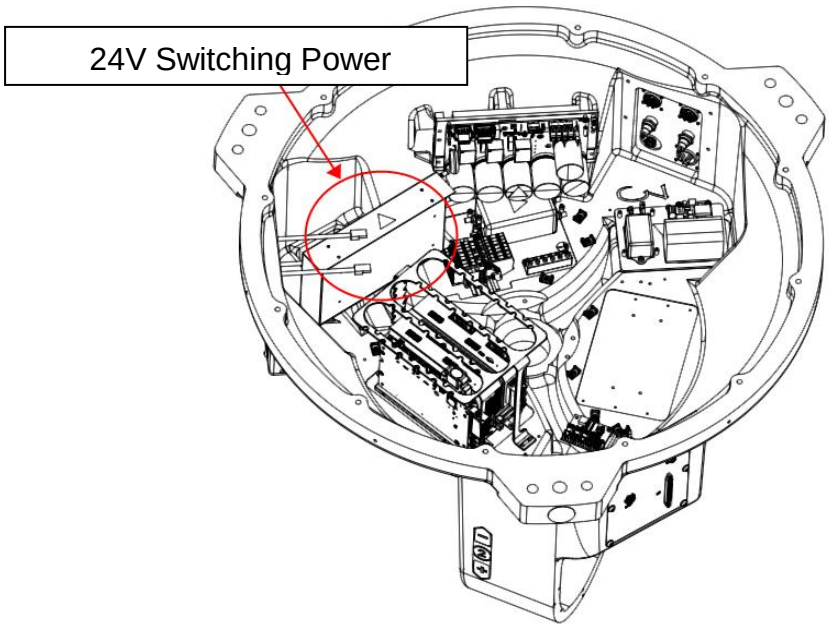

Figure 4-18 Schematic diagram of the location of 24V switching power supply

Step 1 Remove the screws on the top cover of the robot base, and gently move the top cover to a safe position.

Step 2 Use the No. 3 Allen key to unscrew and remove the four fixing screws on the 24V switching power supply adapter board, as shown in Figure 4-19.

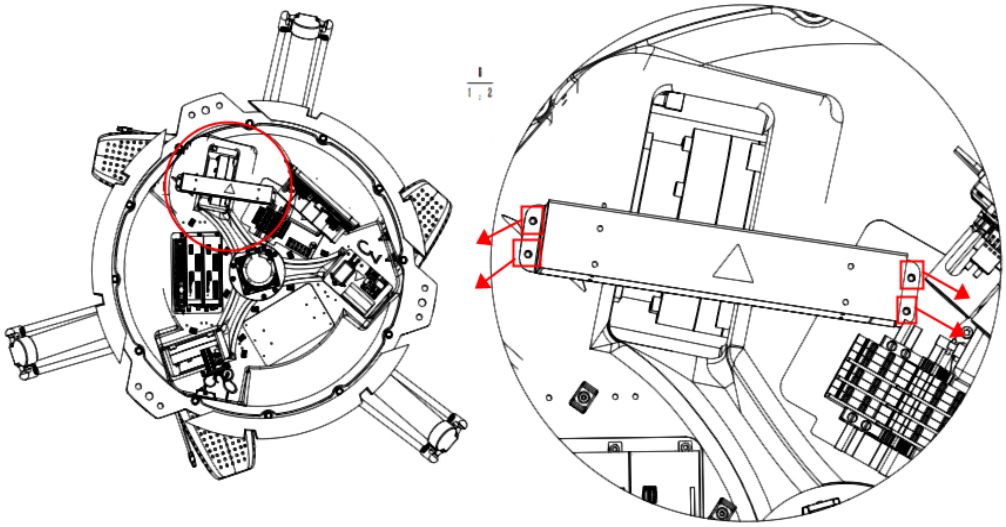

Figure 4-19 Schematic diagram of removing the 4 fixing screws on the 24V switching power supply adapter board

Step 3 Use a Phillips screwdriver to unscrew the screws securing the 24 V power cable and the 220 V power cable on the switching power supply, and remove all cables from the switching power supply.

NOTE

Wire marking of 24V power cord: +24V #1, G24#1

Free distribution of PCBA 24V power cable line label: +24V#6, G24#6

Wire marking of 220V power cord: L-5, N-5, PE-4

Step 4 Use an Allen wrench to unscrew and remove the four fixing screws on the 24V switching power supply, and take out the switching power supply, as shown in Figure 4-20.

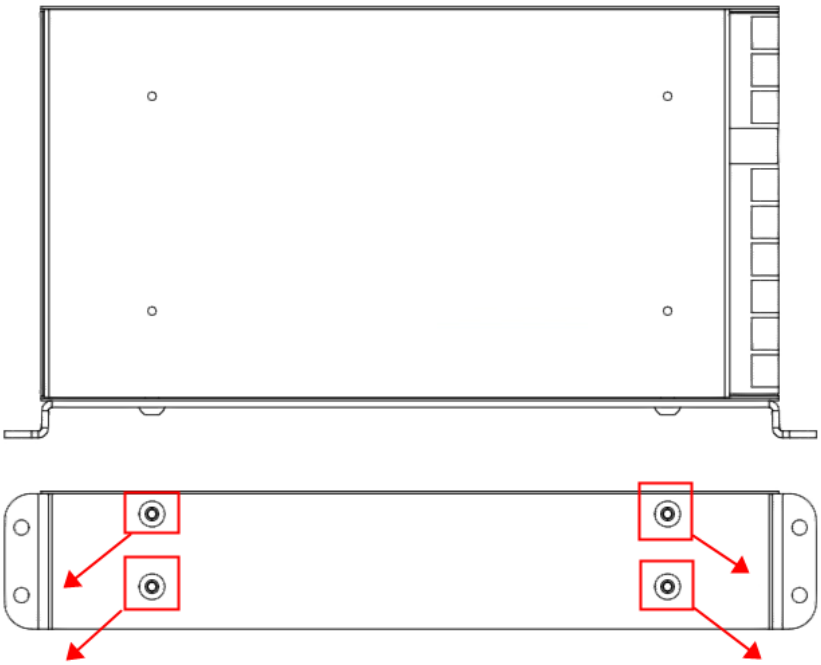

Figure 4-20 Remove the fixing screws of the switching power supply

Step 5 Install the new switching power supply on the adapter plate and tighten the screws.

Step 6 Connect all cables to the new switching power supply and tighten the screws.

Step 7 Fix the adapter plate with the switching power supply on the base and tighten the screws.

Step 8 Reinstall the top cover of the robot base and tighten the screws.

4.8 Replacement and maintenance of UPS power supply PCBA

The UPS power supply PCBA is located in the robot base. To replace it, the top cover of the base needs to be removed. The UPS power supply PCBA is shown in Figure 4-21.

Preparation tools and accessories: Phillips screwdriver, diagonal pliers, UPS power supply PCBA, anti-static gloves

Screw type: cross combination screw (M3*8), 304 stainless steel shrapnel washer

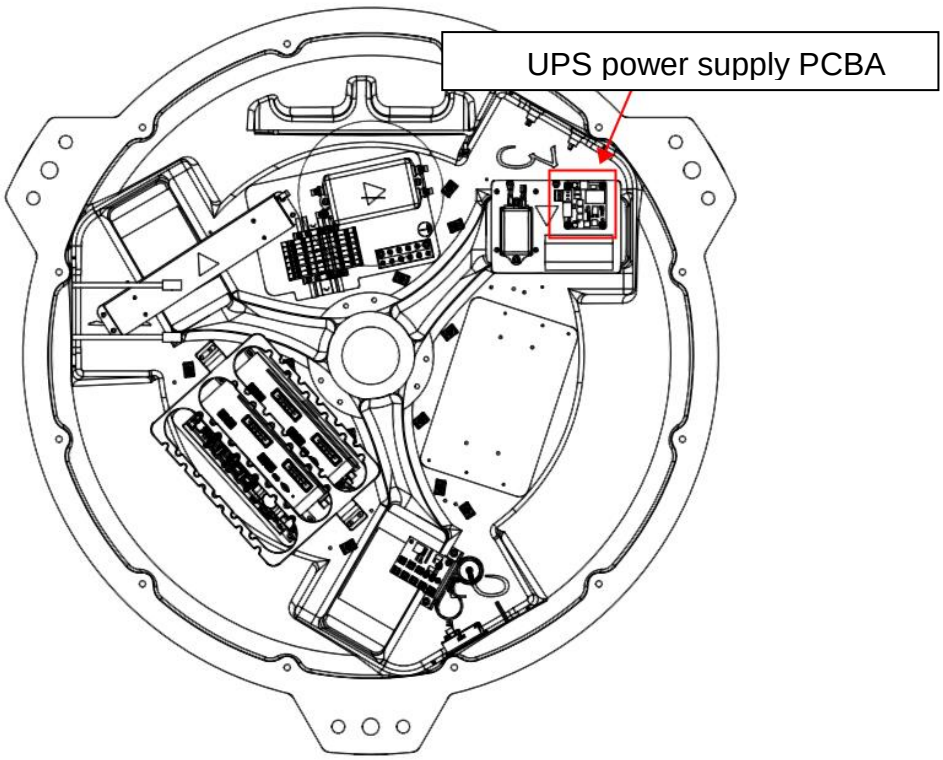

Figure 4-21 Schematic diagram of UPS power supply PCBA location

Step 1 Remove the screws on the top cover of the robot base, and gently move the top cover to a safe position.

Step 2 Unplug all cables connected to the UPS power supply PCBA.

Step 3 Use a Phillips screwdriver to unscrew and remove the four fixing screws on the UPS power supply PCBA, as shown in Figure 4-22.

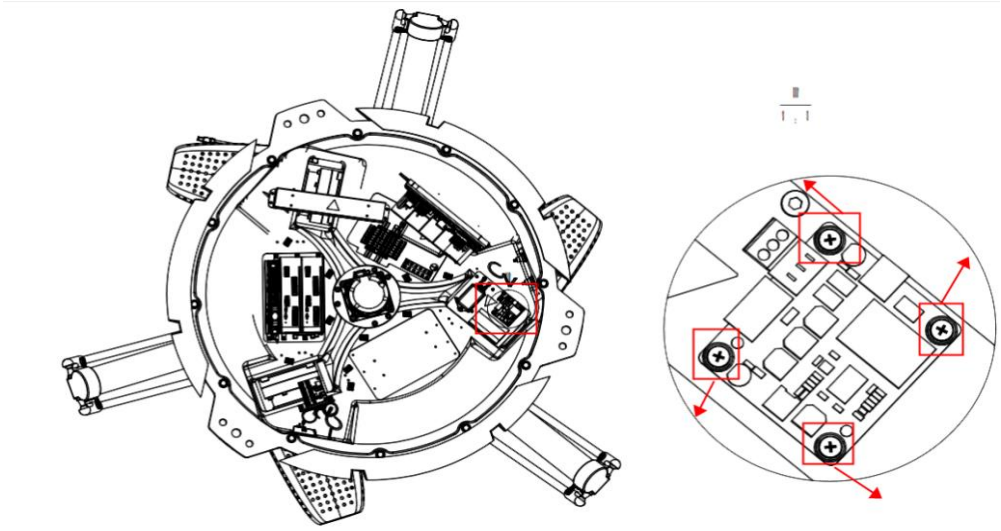

Figure 4-22 Remove the UPS power supply PCBA fixing screws

Step 4 Remove the old PCBA, install the new UPS power supply PCBA, and tighten the screws.

Step 5 Insert all the cable connectors into the new UPS power supply PCBA.

NOTE At the time of installation, users shall check whether the interfaces match the line labels to avoid damage to the controller due to wrong connection. Line labels corresponding to each interface are shown in the figure below:

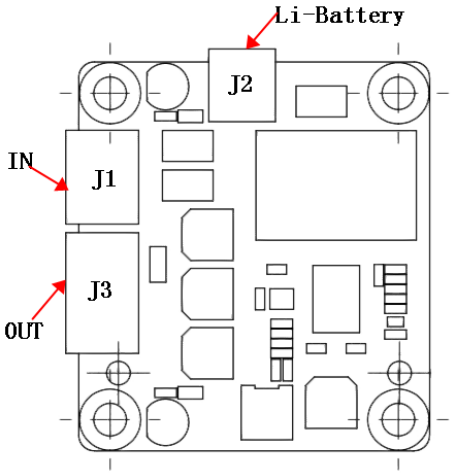

Step 6 Reinstall the top cover of the robot base and tighten the screws.

4.9 Replacement and maintenance of UPS lithium battery

The UPS lithium battery is located in the robot base. If you need to replace it, you need to remove the base cover. The UPS lithium battery is shown in Figure 4-22.

Preparation tools and accessories: cable ties, diagonal pliers, UPS lithium battery, anti-static gloves

Screw type: socket head cap screw (M4*8)

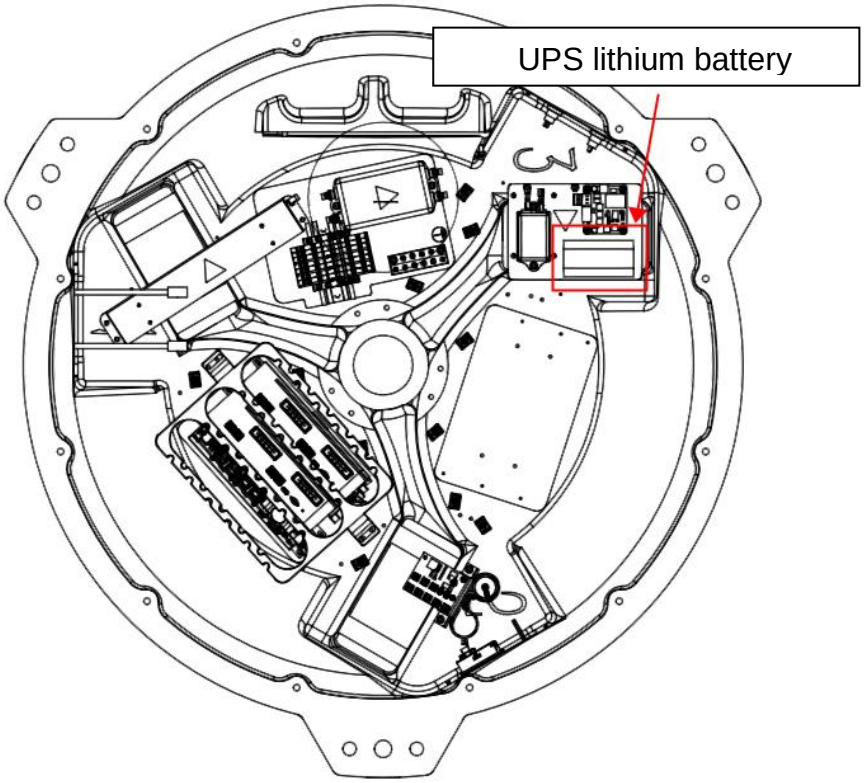

Step 1 Remove the screws on the top cover of the robot base, and gently move the top cover to a safe position.

Step 2 Unplug the connector connected to the UPS power supply PCBA.

Step 3 Use diagonal pliers to cut off the cable ties tied to the lithium battery, and take out the old lithium battery.

Step 4 Use an Allen wrench to remove the plate screws securing the lithium battery, as shown in Figure 4-24.

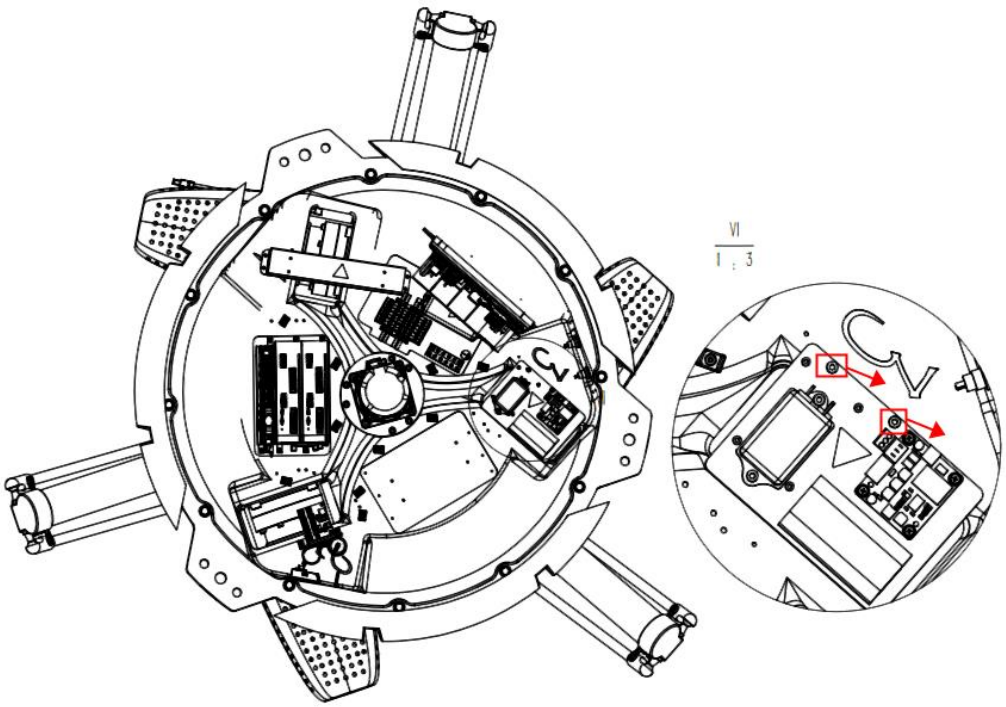

Figure 4-23 Remove the plate screws that fix the lithium battery

Step 5 Tie the new UPS lithium battery to the metal plate with a cross with a cable tie.

Step 6 Reinstall the plate back on the base and tighten the screws.

Step 7 Insert all cable connectors into the UPS power supply PCBA interface.

Step 8 Reinstall the top cover of the robot base and tighten the screws.

4.10 Replacement and maintenance of brake plate

The brake plate is located in the base of the robot. If it needs to be replaced, the top cover of the base needs to be removed. The brake plate is shown in Figure 4-25.

Preparation tools and accessories: Allen wrench, diagonal pliers, UPS lithium battery, anti-static gloves

Screw type: socket head cap screw (M4*8)

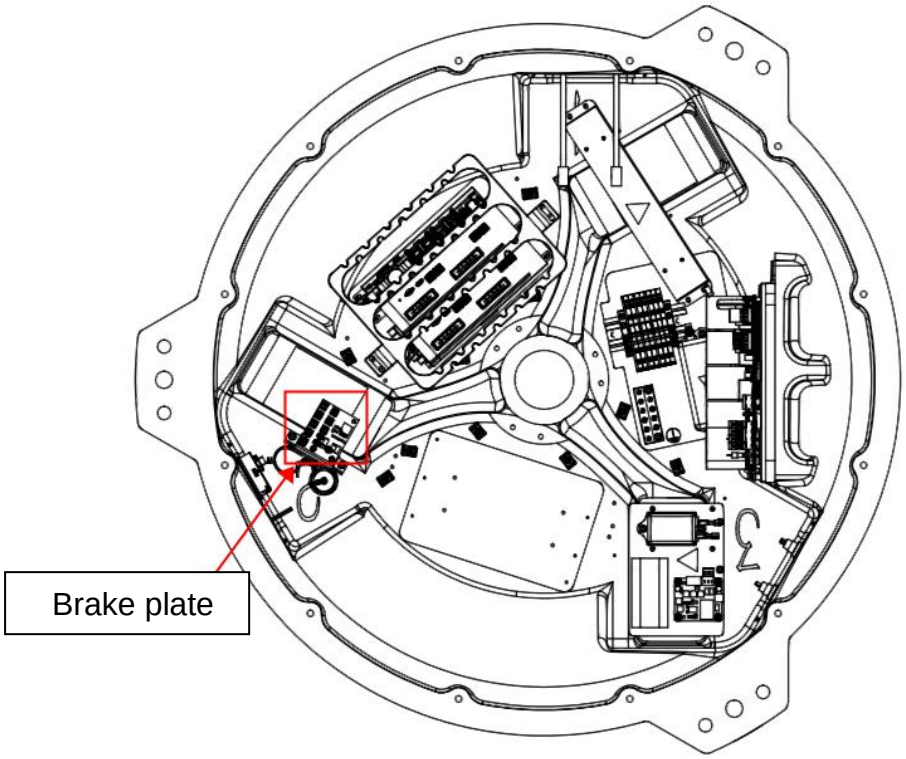

Figure 4-24 Schematic diagram of the position of the brake plate

Step 1 Remove the screws on the top cover of the robot base, and gently move the top cover to a safe position.

Step 2 Unplug all cables connected to the brake board.

Step 3 Use an Allen wrench to remove and remove the two screws securing the brake plate, as shown in Figure 4-26.

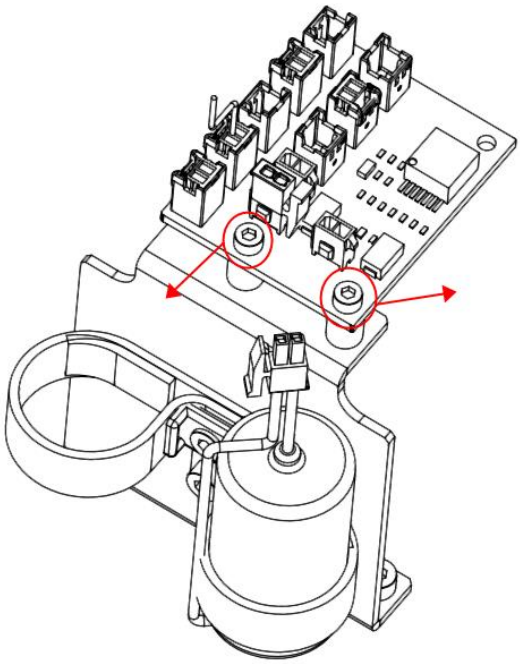

Figure 4-25 Remove the screws securing the brake plate

Step 4 Remove the old brake plate, install the new brake plate, and tighten the screws.

Step 5 Reinsert all cables back into the brake plate to restore the cables.

Step 6 Reinstall the top cover of the robot base and tighten the screws.

4.11 Detection of abnormalities in fan

When the robot reports "E-STOP" and the emergency stop button is normal, it is very likely that any fan of the robot is abnormal and the robot fails to work normally. At this time, be sure to perform abnormality detection to confirm the fan that may be malfunctioning and deal with or replace it in time. The detection of abnormalities in the fan is as follows.

The fan is located in the base of the robot. If you need to replace it, you need to remove the top cover fan assembly. Figure 4-27 shows the location of the fan.

Preparation tools and accessories: cable ties, diagonal pliers, remodeled components for the top cover fan, anti-static gloves

Screw type: hexagon socket flat head screw (M5*16)

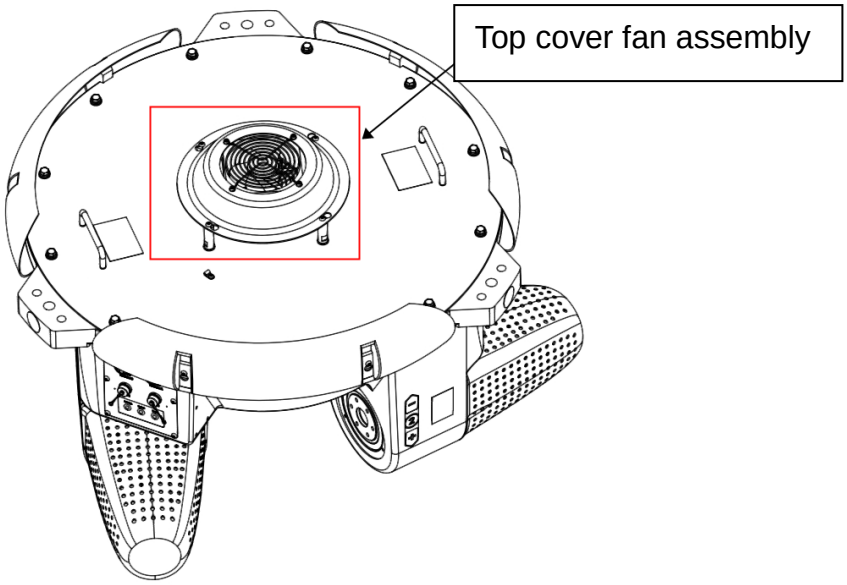

Figure 4-26 Schematic diagram of the location of the top cover fan assembly

Step 1 Unplug the cable between the top cover fan and the base and connect the cable on the base interface board.

Step 2 Use a 3mm Allen wrench to remove and remove the four round head Allen screws that secure the fan assembly, as shown in Figure 4-28.

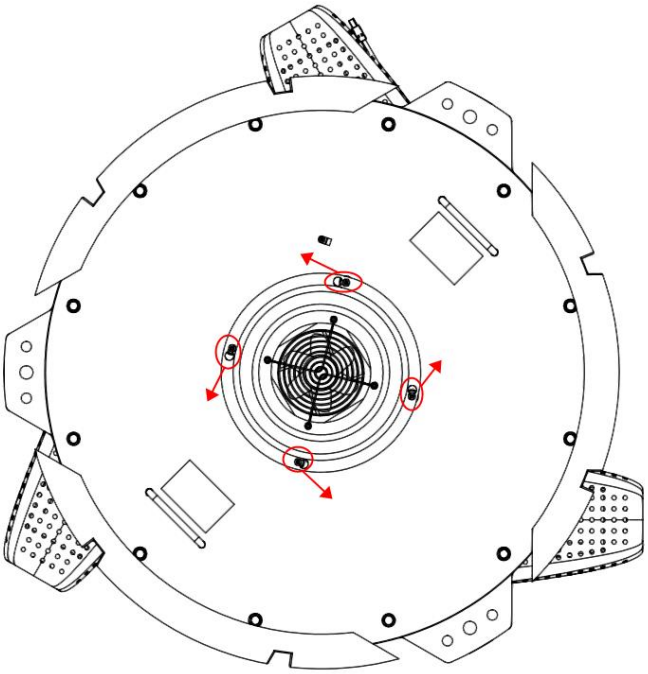

Figure 4-27 Top cover fan assembly removal screw

Step 3 Remove the old top cover fan assembly, continue to remove the four screws securing the fan with a 3mm Allen key counterclockwise, and remove the old fan, as shown in Figure 4-29.

Step 4 Install the new fan in and fasten it with screws.

Step 5 Install the installed fan assembly on the top cover and tighten the screws.

Step 6 Connect the fan to the base interface board, and the replacement is complete.

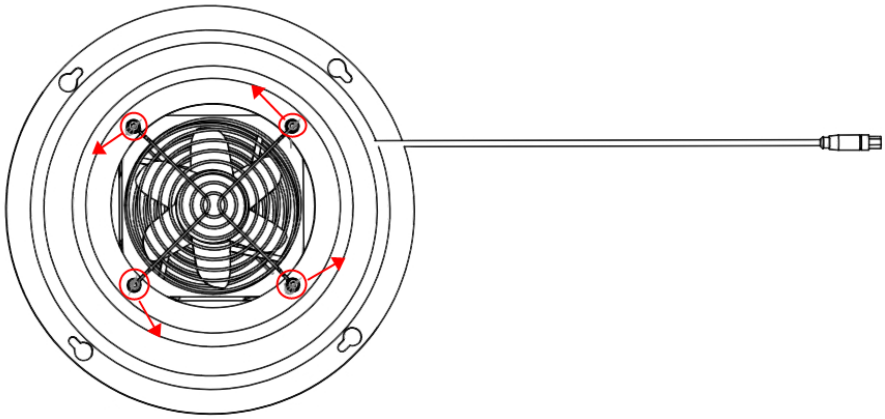

Figure 4-28 Remove the fan fixing screws

Chapter 5 Environmental Protection

5.1 Considerations for environmental conditions

External environmental conditions affect the operating performance of the robot in the environment, and the robot has an impact on the environmental cleanliness.

- AP3X Robot is designed for use under the following conditions:

1. All components of the robot, including its cables, meet the protection grade of IP 65;

2. Ambient temperature: 0°C ~ 45°C (32°F ~ 113°F);

3. Relative humidity ≤ 95%, no condensation;

4. Alcohol, weak alkali and chlorine-containing caustic soda can be used as general cleaning agents to clean the robot.

- AP3X Robot contributes to environmental protection as follows:

1. The robot designed with advanced surface coating and treatment technologies does not affect the environment during the cleaning process;

2. Lubricant is used under multiple sealing conditions without any leakage;

3. Ball joints have good self-lubricating performance without any lubricant;

4. Springs are made of high-quality spring steel with excellent stability and resistance to rust;

5. Even small parts of the robot are connected tightly enough without any environmental pollution.

5.2 Use in clean room

The standard version of AP3X Robot is configured for use under non-clean room conditions. If you need to use it in a clean room environment, please contact QKM for more information on models and environment selection.

5.3 Design considerations

The requirements of each component of the robot for the environment and cleanness are as follows:

- Robot body:

The robot body and its most parts are made of aluminum alloy, which can effectively withstand the load caused by high pressure washing. Similarly, high-quality aluminum alloy enables the robot to resist corrosion from cleaning agents to a certain extent. The smooth surface of the robot is conducive to cleaning with cleaning agents or fluids. The drive parts of the robot, including its motor and reducer, are fully sealed and protected in the robot body, with a protection level of IP 65. All the sealing materials comply with general industrial cleaning standards.

NOTE

Like most sealing materials, the sealing performance of the seals would be weakened and fail before the design time due to excessive cleaning, corrosive cleaning, and over-pressure cleaning.

- Master arm and slave arm:

The master arms and slave arms of the robot are made of carbon fiber and aluminum alloy. The master arms and slave arms manufactured by bonding with epoxy resin can withstand general cleaning conditions, e.g. cleaning agent of caustic soda is used. The connection between the master arm and the robot body is sealed with a waterproof and dustproof seal with a protection level of IP 65.

- Ball joint:

The ball joint is designed to be completely cleaned with cleaning agent of caustic soda or by flushing. It can be used without any lubricant after being cleaned and cleaning agent is removed from its surface.

- Spring:

The slave arms are connected by spring to enable the ball joints to work more efficiently. The spring has excellent resistance to corrosion. If exposed to the air, the spring is easily polluted in the environment, whereas it can be cleaned by rinsing or even immersion.

- Moving platform:

The moving platform of AP3X 4-axis Robot has undergone strict surface treatment and can be cleaned with basic cleaning agents such as caustic soda and water. All the platforms are designed to meet the basic requirements of sealing for easy cleaning and drying, with high compatibility and long service life.

Provide Superior Robot Products and Services to Global Manufacturers

QKM Technology (Dongguan) Co., Ltd. (Headquarters)
Tower A, Building 17, Headquarters 1, No. 4 Xinzhu Road, Songshan Lake High-tech Industrial Development Zone, Dongguan City, Guangdong Province
Tel: +86 0769-27231381
Fax: +86 0769-27231381-8053
Postcode: 523808
E-mail: service@qkmtech.com
Website: www.qkmtech.com

扫描微信二维码
关注李群自动化

Scan QR Code to follow QKM